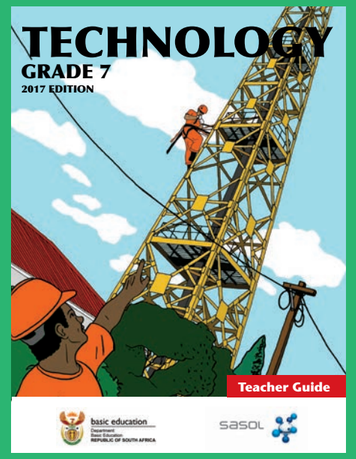

ISBN XXXXXX

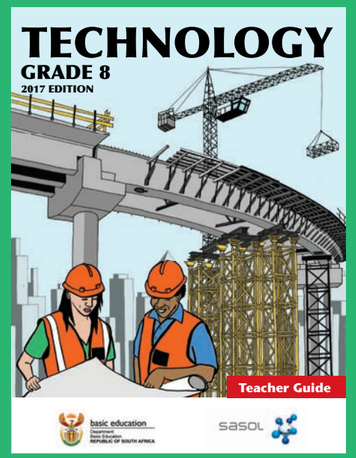

ISBN XXXXXX



ISBN XXXXXX

TECHNOLOGY GRADE 8

2017 EDITION

Teacher Guide

TECHNOLOGY

GRADE 8

2017 EDITION

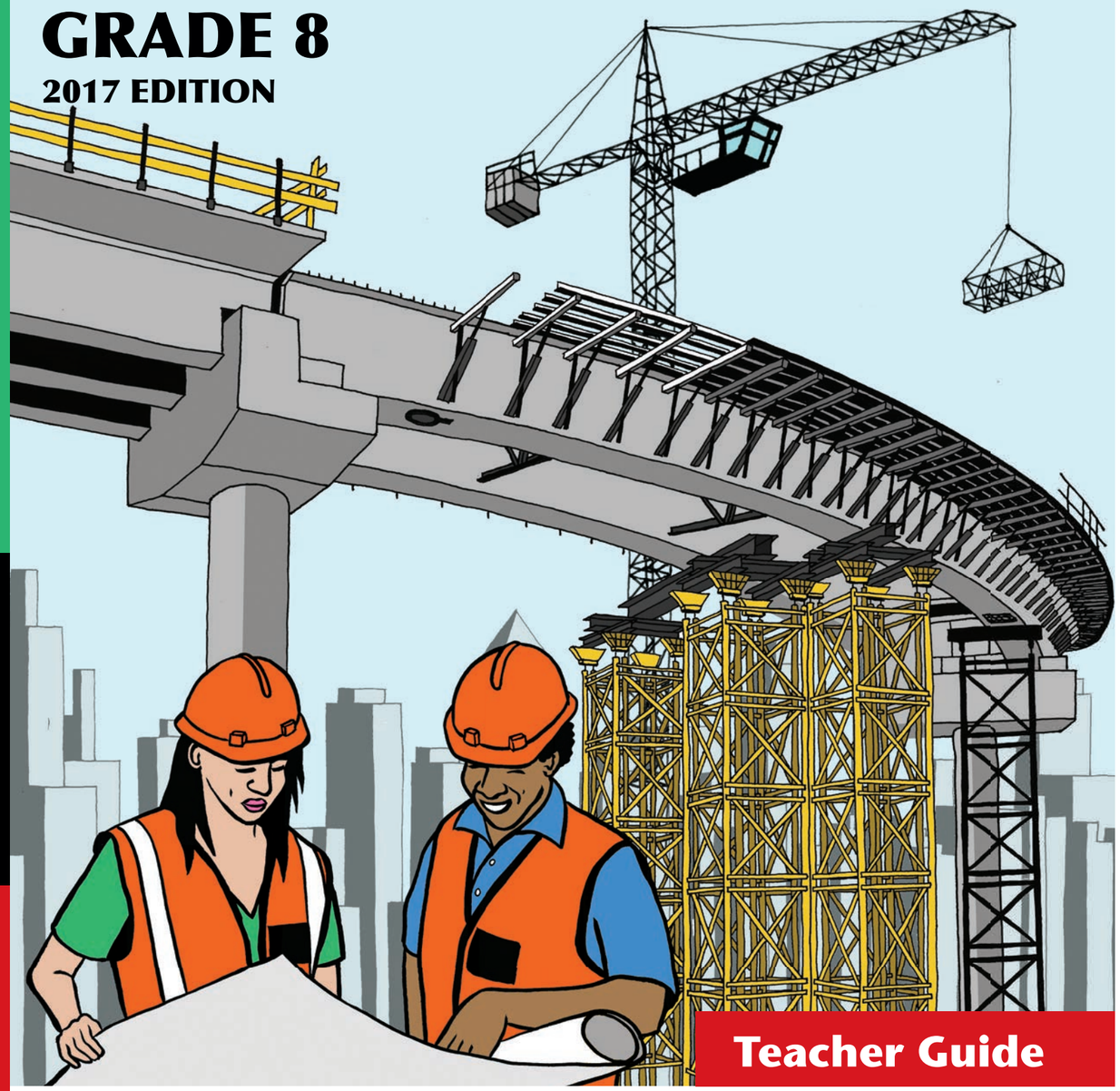

Teacher Guide

basic education
Department:
Basic Education
REPUBLIC OF SOUTH AFRICA

sasol

TECHNOLOGY

Grade 8

2017 Edition

CAPS

Teacher Guide

Developed and funded as an ongoing project by the Sasol Inzalo Foundation in partnership with the Ukuqonda Institute.

Published by The Ukuqonda Institute
9 Neale Street, Rietondale, 0084
Registered as a Title 21 company, registration number 2006/026363/08
Public Benefit Organisation, PBO Nr. 930035134
Website: http://www.ukuqonda.org.za

This edition published in 2017
© 2017. Copyright in the work is vested in the publisher.
Copyright in the text remains vested in the contributors.

ISBN: xxxxxxxxxxxxx

This book was developed with the participation of the Department of Basic Education of South Africa with funding from the Sasol Inzalo Foundation.

Contributors:
Graham Barlow, Louis Botha, Louise Carmichael, John de Klerk, Jacqui Greenop, Andrew Hofmeyr, Chris Human, Piet Human, Riekie Human, Xenia Kyriacou, Morne Labuschagne, John Laurie, Ezekiel Makwana, Rallai Maleka, Mafahle Mashegoana, Themba Mavuso, Peter Middleton, Lebogang Modisakwena, Peter Moodie, Neil Murtough, Sarah Niss, Humphrey Nkgogo, Phillip Radingoane, Jan Randewijk, Margot Roebert, Marlene Rousseau, Marcus Taba, Yvonne Thiebaut, Cecile Turley, Louis van Aswegen, Karen van Niekerk, Elene van Sandwyk

Illustrations and graphics:
Astrid Blumer (Happy Artworks Studio), Ian Greenop, Chris Human, Piet Human, Peter Middleton, Peter Moodie, Melany Pietersen (Happy Artworks Studio), Theo Sandrock, Lisa Steyn Illustration, Heine van As (Happy Artworks Studio), Leonora van Staden, Geoff Walton

Cover illustration: Leonora van Staden

Photographs:
Lenni de Koker, Ian Greenop, Chris Human, Tessa Oliver, Elsa Retief (GalleryProductions)

Text design: Mike Schramm
Layout and typesetting: Lebone Publishing Services

Thanks for free sharing of ideas, and free access to photographs, to:
Cape Peninsula Fire Protection Association, National Sea Rescue Institute, Beate Hölscher (South African Environmental Observation Network), The Transitions Collective (www.ishackliving.co.za).

Thanks to people or institutions who placed photographs in the public domain on www.commons.wikimedia.org, with no attribution required.

Thanks to June Ruivivar (2004), whose photo appears on page 45, for sharing that photo on www.wikipedia.org under the Creative Commons Attribution-ShareAlike 3.0 License.

Printed by [printer name and address]

COPYRIGHT NOTICE

Your freedom to legally copy this book

This book is published under a Creative Commons Attribution-NonCommercial 3.0 International License (CC BY-NC).

You are allowed and encouraged to freely copy this book.You can photocopy, print and distribute it as often as you like. You may download it onto any electronic device, distribute it via email, and upload it to your website, at no charge. You may also adapt the text and illustrations, provided you acknowledge the copyright holders ('attribute the original work').

Restrictions: You may not make copies of this book for a profit-seeking purpose. This holds for printed, electronic and web-based copies of this book, and any part of this book.

For more information about the Creative Commons Attribution-NonCommercial 4.0 International (CC BY-NC 4.0) license, see https://creativecommons.org/licenses/by-nc/4.0/

Except where otherwise noted, this work is licensed under the Creative Commons Attribution-NonCommerical 4.0 International licence.

Table of contents

Term 1

Chapter 1:
Roofs and pylons 2

Chapter 2:
Buildings and bridges 18

Chapter 3:
Flat and isometric working drawings..... 34

Chapter 4:
Perspective drawing 46

Chapter 5:
Wedges, wheels and gears 60

Chapter 6:
Mechanisms that change the type of movement 76

Chapter 7 Mini-PAT:
Design and make a model of a machine to crush grain 90

Term 2

Chapter 8:
The impact of Technology on society and the environment 110

Chapter 9:
Making new things out of old things 124

Chapter 10 Mini-PAT:
Design a house to use less energy 140

Term 3

Chapter 11:
Levers, linkages and gears 180

Chapter 12:
Mechanical advantage calculations 202

Chapter 13:
Drawing gear systems 214

Chapter 14:
Bevel gears, bicycles and systems diagrams..... 232

Chapter 15:
Investigate aspects of mining in South Africa 244

Chapter 16 Mini-PAT:
A mine needs a lifting system..... 266

Term 4

Chapter 17:
Electrical systems and control 298

Chapter 18:
Energy supply for the people 318

Chapter 19:
Electrochemical cells and batteries 334

Chapter 20:
Generating electricity for the nation 348

Chapter 21 Mini-PAT:
Circuits with logic control 370

Minimum materials and tools needed for technology activities

Learners need to bring their own basic writing and drawing tools to class, as well as some waste materials that will be reused. But the school should provide all the other materials and tools listed below.

Not all the materials and tools will be used in every chapter. At the start of each chapter there is a list of the specific tools and materials required for that chapter.

Important: The teacher should read about the required materials and tools for a chapter at least one week before that chapter starts. This will ensure that there is enough time for the teacher to put the necessary materials and tools together, and time for the learners to gather the materials they have to bring to school.

Tools to be bought by learners (Necessary for all Technology classes)



Pen, pencil, sharpener, eraser, ruler (30 cm)

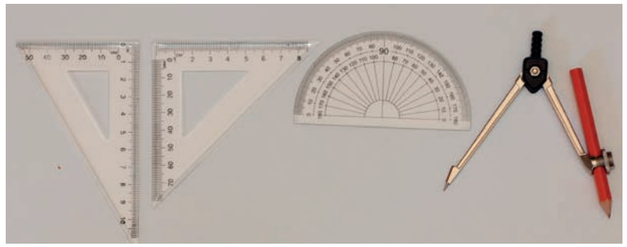

Geometry instruments: compass, protractor, set squares (30° and 45°)



Calculators

Materials to be sourced by learners (reuse packaging materials etc.)



Left: New 180 gsm cardboard in different colours (optional, only if learners can afford it). Middle: Reused Cardboard (thick cardboard like that used for cereal boxes). Right: Corrugated cardboard (single layer)



Cardboard tubes from rolls of toilet paper, foil, etc.

Materials to be bought by schools



Big, strong scissors/ kitchen snips (buy in bulk at about R15 each). DO NOT USE SMALL CHEAP SCISSORS!



New 180 gsm cardboard in different colours (much thinner than cereal box cardboard, and easier the cut and fold)



Masking tape



Wood glue (glue stick like 'Pritt' is optional)



Prestik (masking tape can be used instead if this is not available)



String (cotton, 2-3 mm)



Copper wire, 1 mm (this bends easily by hand and can be cut with scissors; buy from hardware store)

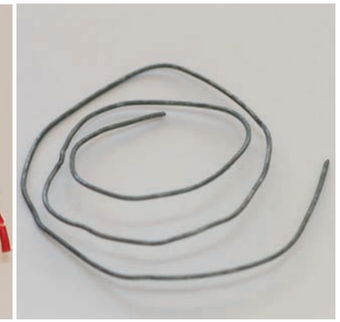

Galvanised steel, wire 1 mm (optional: if pliers or other tools for cutting and bending wire are available)

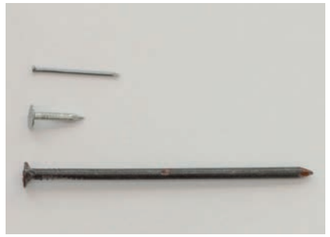

Nails (1 mm, 2 mm, 4 mm, and 6 mm diameters; minimum lengths between 3 cm and 8 cm)

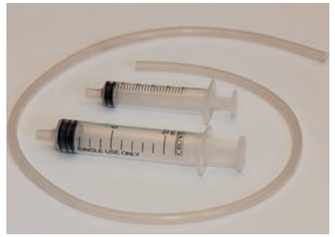

Syringes (buy from a pharmacy, different diameters)
Pipe to use with syringes (buy from a pet shop, for fish tanks)



Paper clips



Paper fasteners (split pins, optional, may need to go to specialist stationary or art shop to buy)



Tooth picks (buy in bulk)



Drinking straws (buy in bulk)

Electric equipment and materials to be supplied by schools

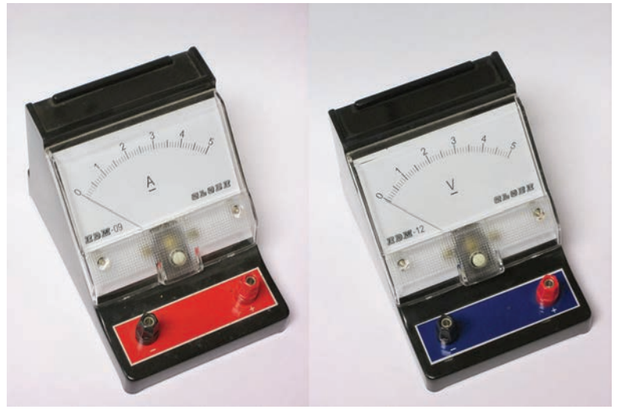

Ammeters and voltmeters (or multimeters)

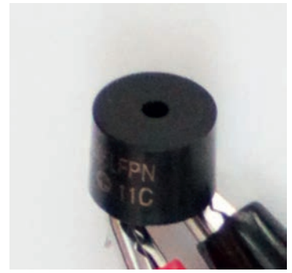

Buzzers



Cells and cell holders

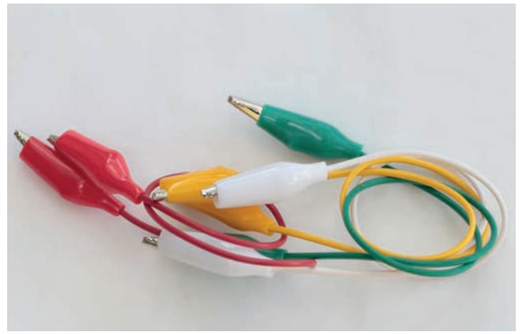

Crocodile clip connecting wires

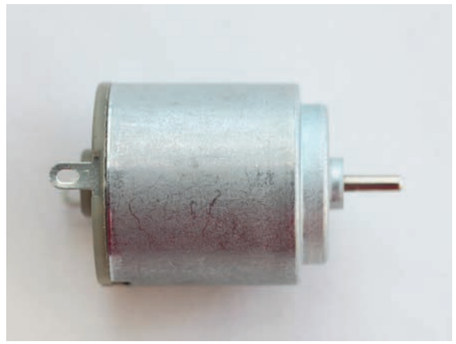

Electric motors



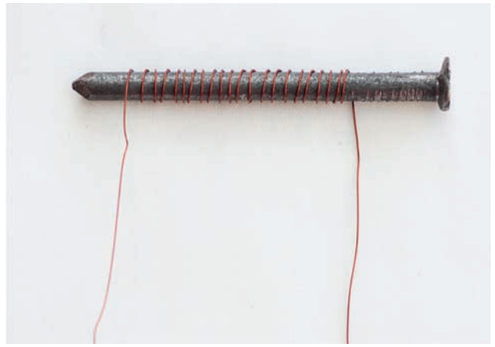

Insulated copper wire to make electromagnets



Light bulbs and light bulb holders



Multimeters (or voltmeters and ammeters)

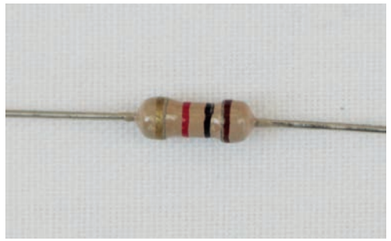

Resistors

TERM 1

CHAPTER 1

Roofs and pylons

LB page 1

In this chapter, you will learn more about **frame structures**.

1.1 How can we make a roof withstand the forces acting on it 5

1.2 More types of forces 8

1.3 Electricity pylons 13

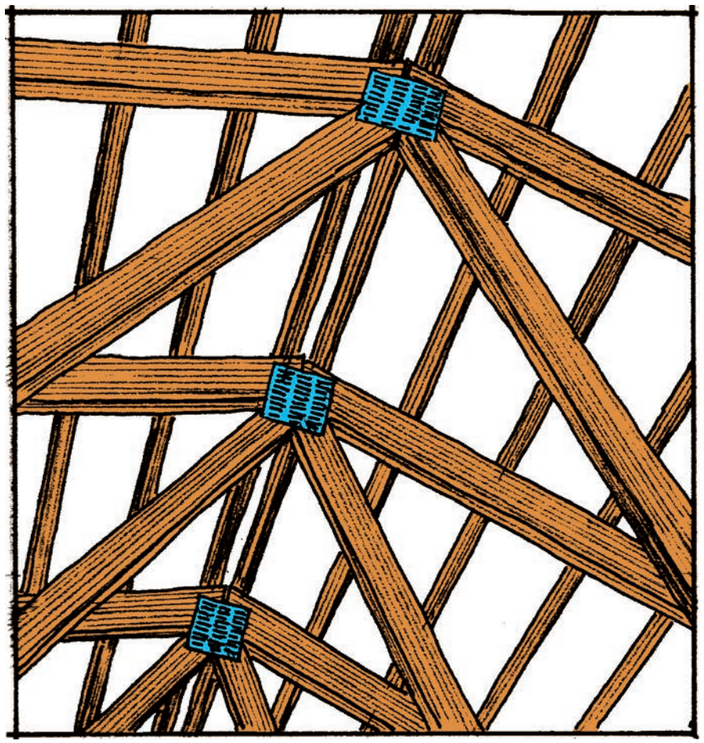

Figure 1: Internal view of a roof structure

In this chapter the learners will study frame structures. The aim of the chapter is to use common examples such as roof trusses and electrical pylons that are familiar to the learners, and through this process define frame structures, show their components and identify the types of forces that act on them.

Materials that will assist with this chapter:

Pen or pencil

Cardboard (reinforced cardboard that is used to make boxes is ideal and easily obtained)

Sticky tape

String

Cardboard tubes (from inside toilet rolls or kitchen supplies such as paper towels or foil)

Modelling clay, if available (the learners can make a substitute clay from flour and water)

Toothpicks

Prestik

1.1 How can we make a roof withstand the forces acting on it?

The examples in this section are designed to give the learners a practical *understanding* of the need for **bracing frame structures** to bear the **loads** (such as roof sheeting) that they carry. Learners will discover that strength does not only come from material, but from design as well. It is important when discussing Figures 4, 5 and 6 to point out that strengthening can be done, but that it is not as practical or economical as **bracing**.

The section on trusses that follows introduces the names of the various parts of the trusses, and these parts need to be emphasised, as the learners will need to know them to understand and identify the various stresses, which they will now learn about. This starts with **tensile forces**. Figures 8 and 9 show how models can be constructed to illustrate the concept.

1.2 More types of forces

Figures 10 and 11 can be used to show the learners how structures can be reinforced or braced. The idea of struts supporting the roof panels can be demonstrated very effectively through a practical example of Figure 13, using a cardboard tube to show compressive force. If the learners have sourced a supply of cardboard tubes, it makes a very good practical exercise for them to apply as a practical example. It is a very simple way of demonstrating **compressive force**.

The next section deals with **torsion** and **shear forces**, use Figures 14 to 16 to explain these forces. If you have a piece of fabric, or a towel, torsion can be shown practically as in Figure 15. Small pieces of clay can be used to demonstrate shear forces as in Figure 16, or by simply

rubbing the clay between their hands and observing the reaction of the material.

In the revision section, 'Revise what you have learnt' you will be able to reinforce the learning of the four different forces, and you can ensure that the learners understand the differences between the forces by checking their answers in their workbooks.

Important: Note that another truss-name – the **queen-post truss** – is introduced at this point. Make sure the learners can identify it.

1.3 Electricity pylons

Electricity pylons are frame structures, and they need to be very strong and securely built. The learners will learn that frame structures are not as affected by wind as solid structures; they are strong, they are more economical than brick towers, and have less impact on the environment.

This discussion leads the learners into the section that focuses on making structures rigid using only a little material. By utilising the examples in Figures 30, 31 and 32, they can refer back to the electricity pylons and show how **triangulation** strengthens frames, and therefore the pylons.

If possible, the learners can use Figures 33, 34 and 35 as templates to build small models using toothpicks and Prestik. They can be divided into three or four groups for this exercise.

To finalise the chapter, the learners revise the four different stresses: tensile, compression, torsion and shear, and ensure that the learners grasp the difference.

LB pages 2–3



Figure 2: Different types of electricity pylons

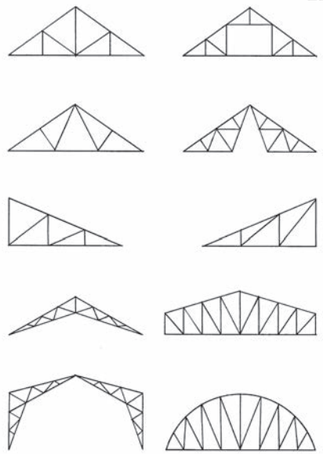

Figure 3: Different types of roof trusses

LB page 4

1.1 How can you make a roof withstand the forces acting on it?

People make and build many different kinds of things, such as houses, motor cars, roads and dams. We also make items like bottles, clothes, books and furniture. Some things, like forks, spoons and knives, are **solid objects** that consist of one part only. Other objects, like bottles, pots and water tanks, are hollow objects that can also be called **shells**. We also make objects that consist of different parts that are put together, like chairs, tables and bridges. These objects are called **frame structures** and it is important to try to make frame structures strong.

Learn about roofs — LB p. 4

Fold a sheet of cardboard in the middle so that it looks like the roof of the house in Figure 4.

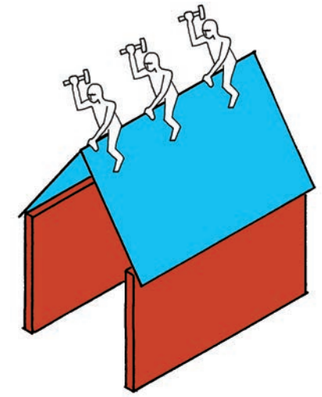

Figure 4

1. Use your hand to press down on the cardboard roof. What happens?

   The structure will collapse.

2. Your house's roof plates may be very strong and will not bend. But what will happen when a couple of big men sit on the roof to fasten the roof sheets?

   With the extra weight of the men on the roof, it might collapse and be dangerous.

One way to make a roof stronger is to use more and thicker materials. However, this is not always a good plan since it will cost a lot more money. It can also make the roof so heavy that the walls of the building are not strong enough to carry it.

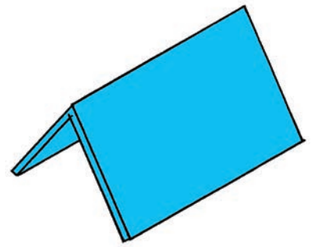

Figure 5

LB page 5

3. A few ways to strengthen a cardboard roof model are shown in the sketches below. Look carefully at each of the sketches. Then write a sentence for each sketch to describe the method to strengthen the roof by **bracing** it.

The word **brace** comes from the French word "bras", which means "arm". When you brace a structure, you put in something like an extra arm to make it stronger.

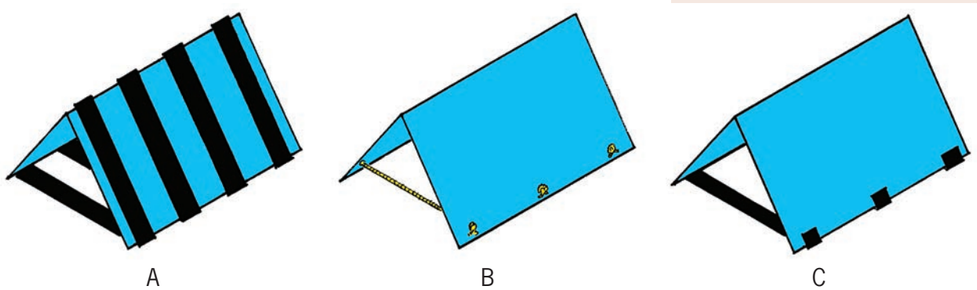

Figure 6

(a) Case A: The roof material is reinforced, and it is braced at the bottom.

(b) Case B: The roof is braced at the bottom, and can't collapse outwards.

(c) Case C: The roof is braced at the bottom, and can't collapse outwards.

Many roofs are supported by frame structures called **trusses**. Trusses can be made of wood or steel. The different parts of a truss are called **members**. Each truss has a vertical member in the middle. This is called a **king post**.

In some truss designs, there are more vertical members. You can see more roof truss designs on the first pages of this chapter.

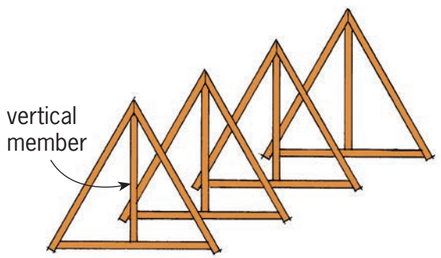

Figure 7: Incomplete roof trusses

LB page 6

Roof trusses have to support the weight of the roof materials, such as roof sheets.

4. What part of the roof trusses shown here will prevent them from tearing apart when the roof sheets are loaded onto them? Show your partner this part on one of the roof trusses on Figure 8.

The learners must indicate that the horizontal members at the bottom prevents the panels from sliding apart.

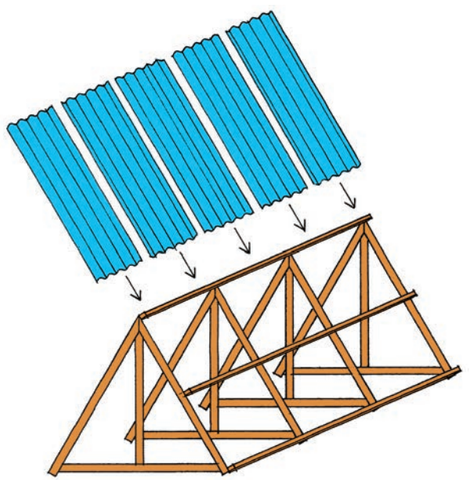

Figure 8

The horizontal member at the bottom of a truss prevents the two sides from ripping apart. Instead of a plank, a rope or a wire can be used to tie the bottom ends of the two sides together. When a plank or piece of steel is used for this purpose, it is called a **tie beam**.

A tie beam has to be strong enough so that it will not be ripped apart by the forces acting on it. The weight of the roof plates pressing down on the trusses can cause the ends of the trusses to pull apart.

You can say that there is **tension** in the tie beam, just like there is tension in a rope you pull.

Forces that cause tension are called **tensile forces**.

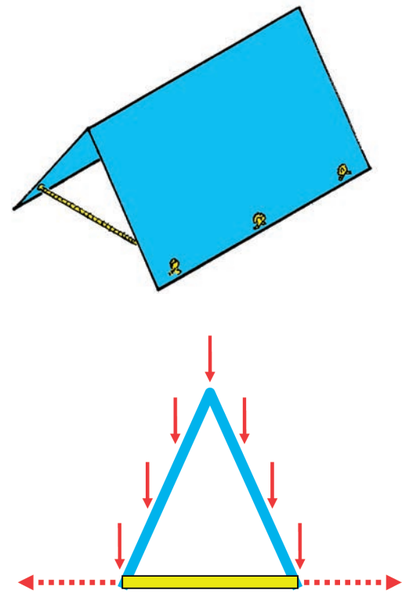

Figure 9: The yellow tie beam is under tension.

1.2 More types of forces

LB page 7

Making a roof even stronger

The two sloping members on the sides of the horizontal beam in Figure 10 are called **rafters**.

1. Copy the drawing in Figure 10. Write the name of each of the four members next to the member on the diagram. This is called adding **labels** to the diagram.

The four answers the learners must enter are shown on the figure:

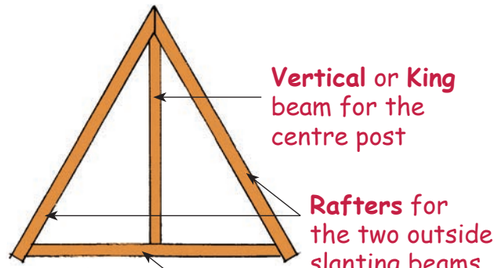

Figure 10

2. The rafters may bend when the wind blows against the roof, or when a heavy load is placed on the roof.

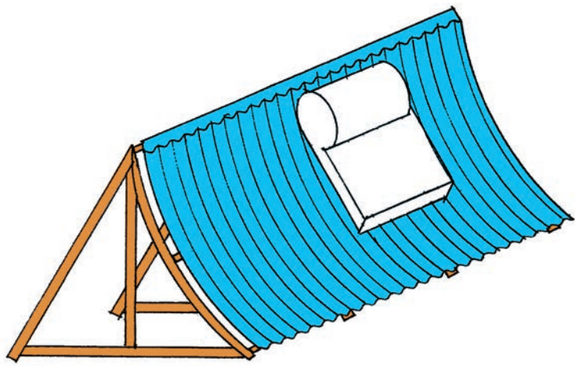

Figure 11

What can you do to strengthen the trusses so that the rafters will not bend when a heavy load is acting on them? Make a sketch to show your plan.

The sketch must show reinforcing of the rafters by the addition of struts. They don't have to be exactly like those shown on the next page; as long as the learners show that the rafters have been reinforced

LB page 8

The trusses on the right have **struts** to support the rafters.

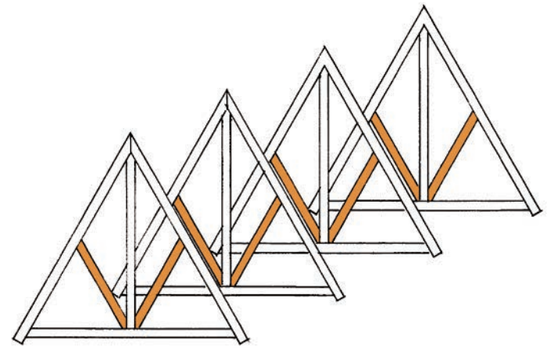

Figure 12

The two photographs below demonstrate the kind of force that acts on roof struts. When a force acts like this, it is called a **compressive force**.







Figure 13: Compressive forces acting on rafters

A force that is able to stretch or pull something apart is called a **tensile force**.
A force that is able to compress or squash something is called a **compressive force**.

Torsion and shear force LB p. 8

1. Roll a sheet of paper into a tube and twist it like the person in the photograph is twisting the towel. By doing this, you apply a **torsion** force on the paper tube.

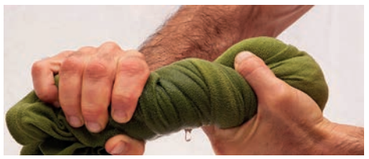

Figure 14

2. Press your hands together tightly as shown in this photograph. Then rub them against each other.



Figure 15

If you put a piece of clay between your hands while you do this, the shape of the clay will change. The force applied by your rubbing hands is called **shear force**.

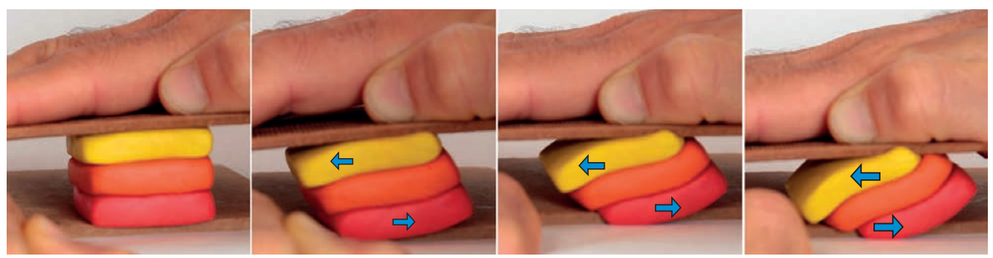

Figure 16

Figure 17 shows two pieces of wood joined with a bolt. If the two pieces of wood are pulled apart or pushed together, a shear force will act on the bolt. This can cause the bolt to bend or even to crack. A thicker bolt will resist a shear force better.

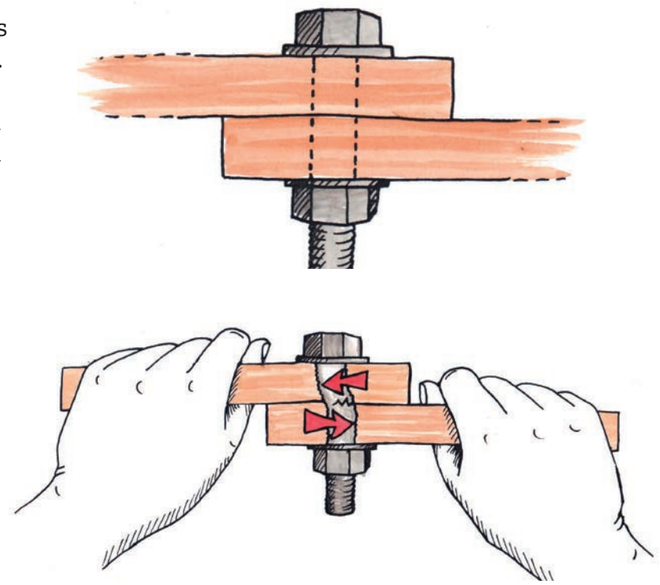

Figure 17

Revise what you have learnt in Grade 7 LB p. 10

1. In each case, say which kind of force is demonstrated in the picture.

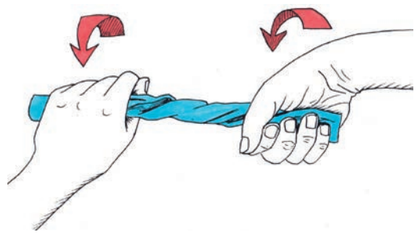

A

Torsion

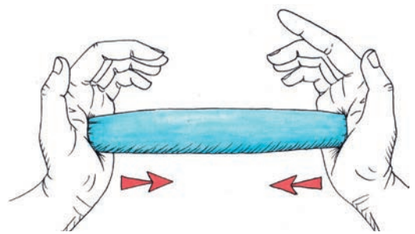

B

Compression

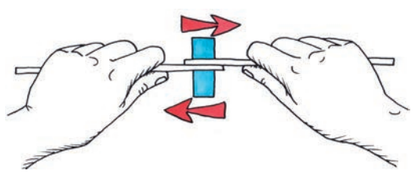

C

Shear

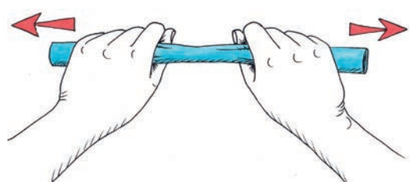

D

Tensile

Figure 18: Different types of forces

2. Will this roof structure work well?
   Describe what could go wrong when roof plates or tiles are put on this roof structure.

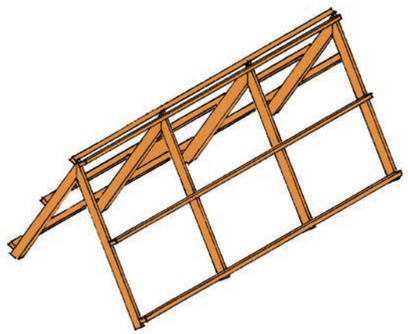

Figure 19

The roof will collapse under the weight, because it is not braced with tie beams.

Trusses like the ones in the drawings below are called **queen-post** trusses.
The two vertical members are called queen-posts. They are shaded in Figure 20.

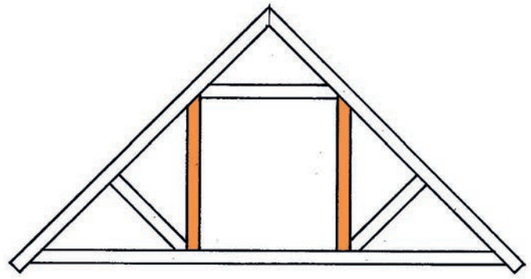

Figure 20

3. Figure 21 is a drawing of another type of queen-post truss. Copy Figure 21 and shade the queen-posts on your drawing.

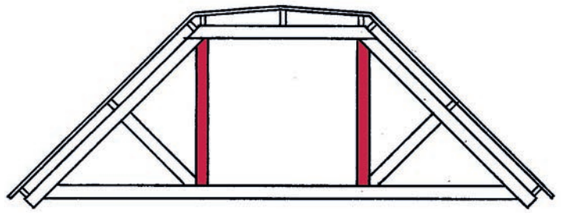

Figure 21

4. Make a copy of the diagram in Figure 22. Label members under compression with a "C" and members under tension with a "T". Do this for all the members except for the rafters.

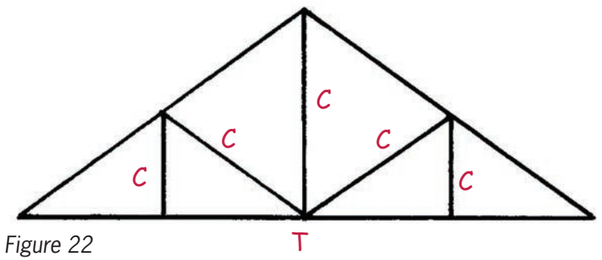

Figure 22

1.3 Electricity pylons

Different designs of electricity pylons

1. Look at the pictures below and on the next page. What purposes do these structures serve? Why do we build them?

   These are pylons that carry electricity cables around the country. The cables are very dangerous and carry very high voltage. They are built to be very safe, resistant to bad weather, and have a long life span.

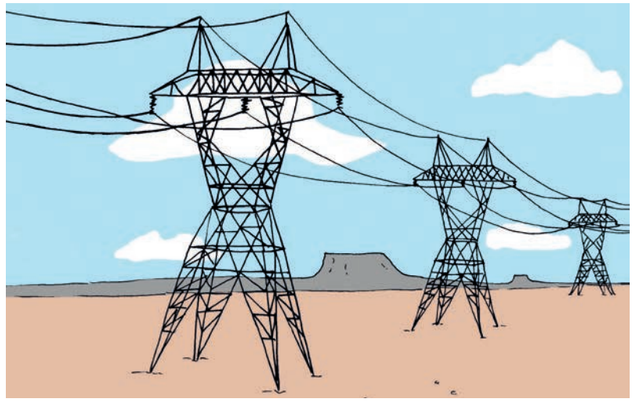

Figure 23

2. Why do you think the pylon in Figure 24 is designed the way it is, and not in the way shown in Figure 25?

   The cross bracing (or triangulation) in Figure 24 gives more stability and rigidity than the horizontal bracing in Figure 25.

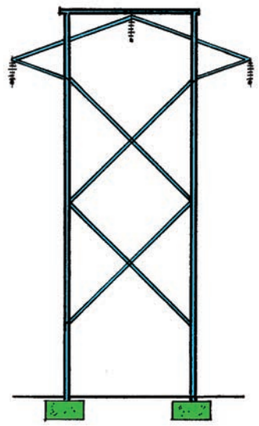

Figure 24

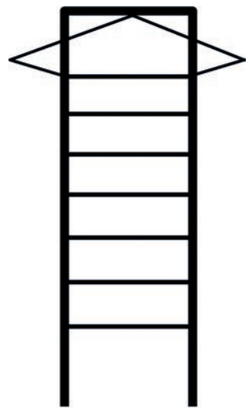

Figure 25

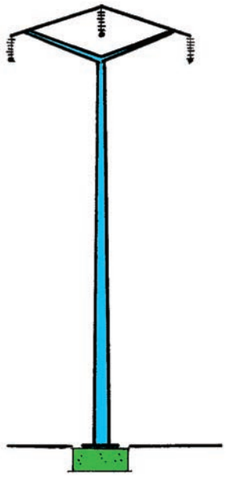

Figure 26

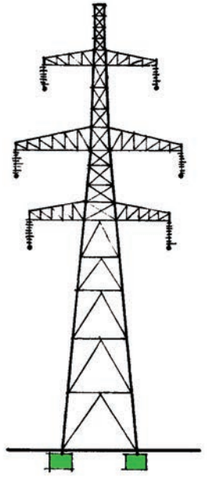

Figure 27

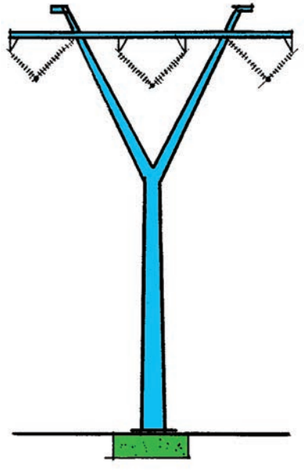

Figure 28

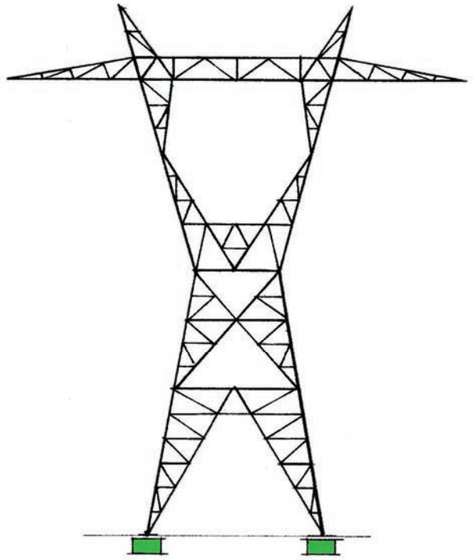

Figure 29

The pylons in Figures 26 and 28 are solid structures made from concrete. All the other pylons are steel frame structures.

3. What do you think is indicated by the green parts in Figure 24 and Figures 26 to 29?

They are the concrete foundations that make the pylons stable.

Making a structure rigid using only a little material LB p. 14

Triangulation

Forces that act on a rectangular frame can make it skew:

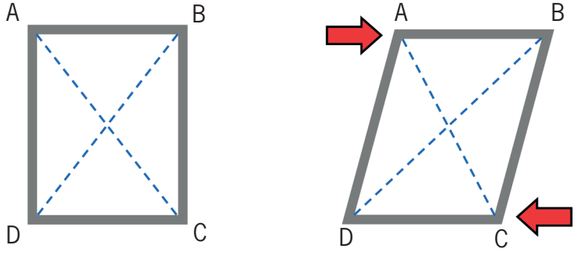

Figure 30: Skewing of a rectangular frame

You can also use the word skew as a verb:
You can say the "forces **skew** the frame".
Or you can say that the "forces **are skewing** the frame".

1. What happens to the lengths of the lines AC and BD when the frame skews? Go measure it and find out!

A-C gets shorter (Compressed), D-B gets longer (Tension).

To prevent a frame from skewing, a support can be inserted to **triangulate** it:

A support inserted to triangulate a frame can also be called a **brace**.

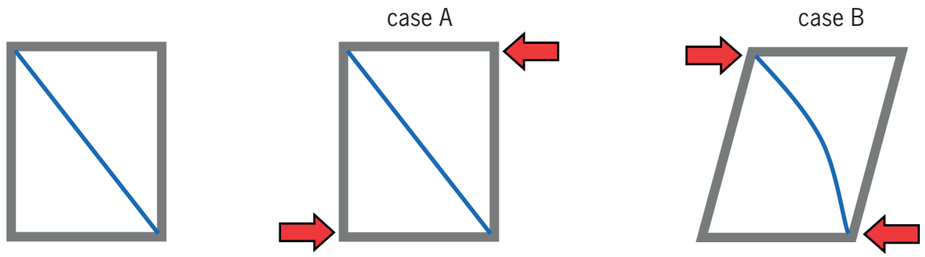

Figure 31: Simple triangulation of a frame

2. Compare what happens when you apply forces as in case A and case B.
   (a) Why does the frame keep its shape in case A but changes shape in case B? Hint: Think about the type of forces acting on the blue beam.

In case A, the blue beam acts as a strut, preventing forces of tension.

In case B, the blue beam is compressed, allowing the frame to bend.

   (b) How can you improve the design of the frame so that forces cannot make it skew?

By placing another strut across the other two corners.

Cross-bracing

Another way to prevent a frame from skewing is to triangulate it twice, to make a cross. One brace goes from the top left to the bottom right of the rectangle. The other brace goes from the top right to the bottom left of the rectangle.

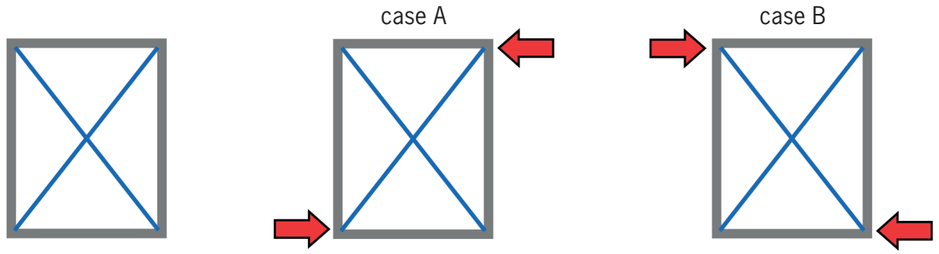

Figure 32: Cross-bracing a frame

This is called **cross-bracing**. It is a special kind of triangulation. With cross-bracing, the frame does not skew when forces are applied as in case A or case B.

3. Compare the frame design in Figure 31 with the one in Figure 32.

   (a) Can you use steel cables instead of beams for the braces in both of these frame designs? Explain your answer.

Yes, you can use steel cables to brace the frames. They will resist the skewing of the frame by acting as braces against the pull exercised by the force.

   (b) If you use steel beams as braces for both frame designs, do you have to use the same thickness beams in both designs? Or can you save material and use thinner braces in one of the designs?

For the frame in Figure 31 you would have to use thicker steel than the frame in Figure 32, because it is not cross-braced.

How to make a tower resist twisting

The structure of a tower should resist changing shape. Two different ways of changing shape are shown below.

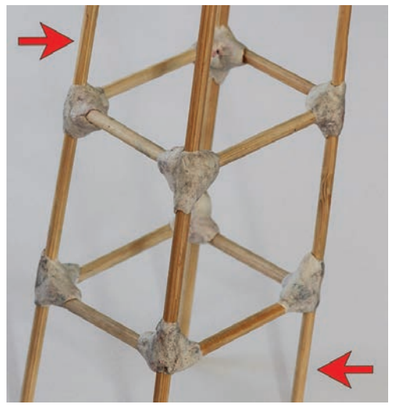

Figure 33: Skewing

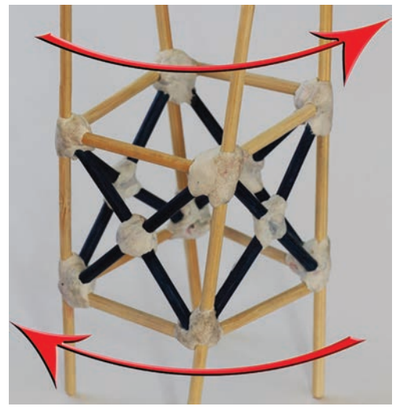

Figure 34: Twisting

Using triangulation or cross-bracing on the outside of a frame helps the frame to resist skewing, but it does not prevent it from twisting, as shown in Figure 34.

Twisting happens when torsion forces act on a structure, as shown by the red arrows in Figure 34. To prevent a tower structure from twisting, you can use cross-bracing *inside* the frame structure. The photos below show how a frame structure can be built with cross-bracing on the inside and on the outside. The cross-bracing on the inside is in red, and the cross-bracing on the outside is in dark blue.

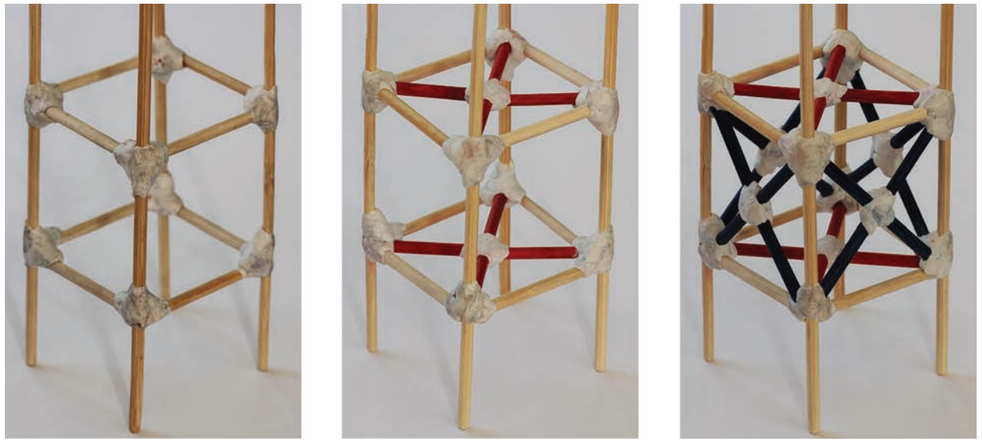

Figure 35: Internal cross-bracing

Chapter 2
Buildings and bridges

LB page 17

In this chapter, you will learn about bridges and other structures that span over spaces. You will learn about different types of bridges, and different ways of making bridges stable and strong.

2.1 Windows and tables 21
2.2 Different types of bridges 25
2.3 Making structures strong enough 29

You will need corrugated cardboard and a pair of scissors to do the work in this chapter. You will also need some sticky tape.

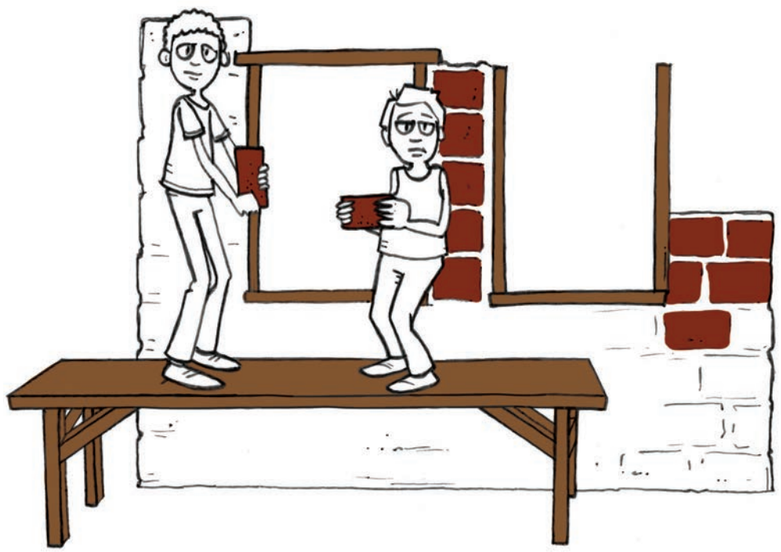

Figure 1: How can the builders lay bricks over the window?

In this chapter the learners focus on structures that span over space. They will learn about beams, alternative bridge supports, arches and cantilevers.

In addition they will learn the three most likely ways that these structures fail: fracturing, bending and toppling. The chapter uses examples familiar to the learners, and follows a progression from a simple structure, such as a table and window, to more complex examples of different types of bridges.

Materials required for this chapter:

Pen or pencil

Corrugated cardboard

Sticky tape

Scissors

2.1 Windows and tables

This section requires practical work from the learners.

In the portion of the chapter that deals with lintels, the learners will discover that structures are not always seen, but still work in the same way. This can be demonstrated by *comparing* a lintel to a table.

In the section 'Build a model table' *encourage* the learners to work creatively. They will have the answer to the problem in Figure 7, but they can be given hints to think about building playing-card houses.

During the *building* process, the learners can be reminded of the lessons learnt about bracing in Chapter 1.

2.2 Different types of bridges

After the learners have completed the questionnaire on Figure 15, it is recommended that various solutions be drawn on the blackboard, and then discussed before considering the illustrations in Figure 16. The learners need to show they have grasped the concept whilst making the tables. Then take them through these examples and explain briefly how each one works.

The learners must study the practical examples in the following figures. Figures 18, 19, 20 and 21 can all be demonstrated practically by allowing the learners to build the various models. Recommended: the learners can experiment practically by constructing the three different types of bridges as described in the text.

Before moving on to section 2.3 the learners revise the types of bridges that are illustrated in Figure 16.

2.3 Making structures strong enough

This is an *investigative* section. The learners must work through questions 1 to 6 individually. Once they have had enough time to fill in the answers, they need to run through the questions one by one explaining their answers.

The emphasis must be on them *identifying* and understanding the three main causes for bridge failures: **fracturing, bending and toppling**. Once they can identify these causes, they must move on to question 7, the difference between suspension and arch bridges. The learners must discuss why these two bridges are safe from the three causes of failure they have identified.

Remind the class that there is homework to be completed for the following lesson.

LB pages 18–19

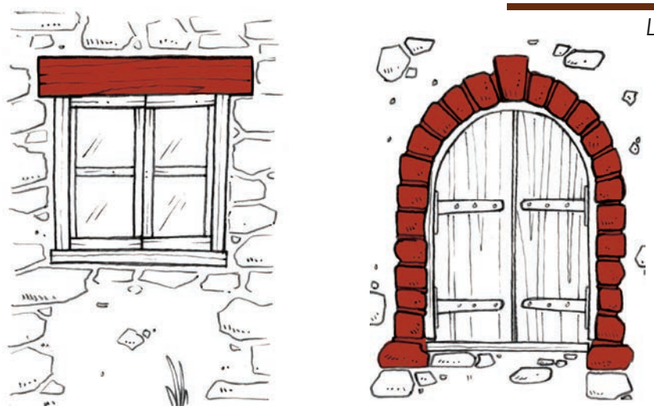

Figure 2: Different ways of supporting the wall above a window or a door.



Figure 3: What is this structure for? How is it supported?

LB page 20

2.1 Windows and tables

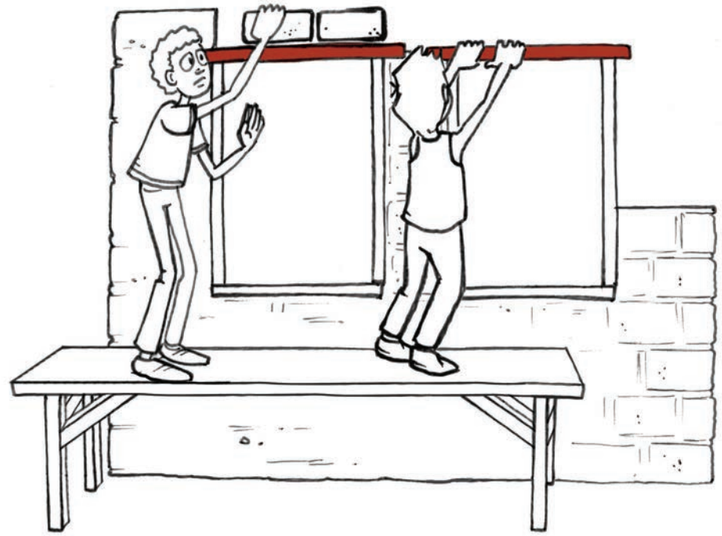

Figure 4

In the picture above, one man is laying bricks above a window, but the window has not been built in yet. What keeps the bricks from falling down?

The wooden plank (lintel) is laid on the wall on either side and supports the bricks above the window.

The other man is inserting a **lintel** across the window opening. A lintel is a piece of wood, steel or concrete that can support the wall above a window.

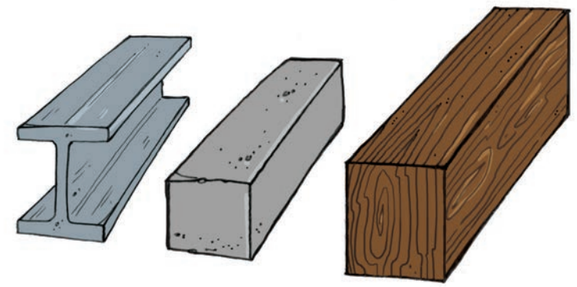

Figure 5

Lintels and objects like those in Figure 5 are called **beams**.

Build a model table LB p. 21

Valencia is in a hurry and needs a few extra tables for a wedding function at her house. She cannot afford to buy real tables, but she has many wide sheets of wood that can be used for tabletops.

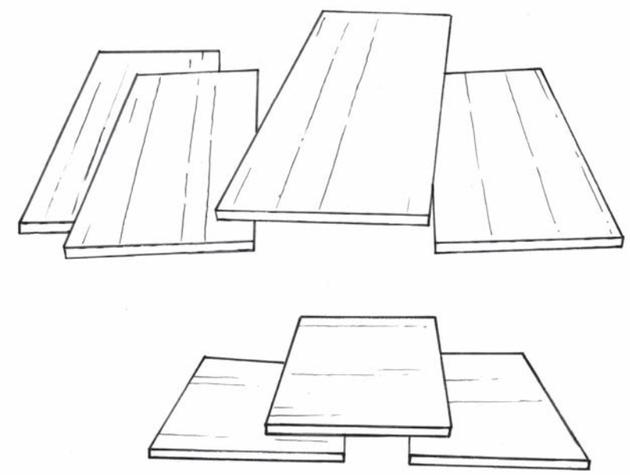

Figure 6

1. How can you use the sheet of wood to make tables, without having to cut the wood? Make a rough sketch of your plan.

Any rough drawing that is a practical suggestion is acceptable. For instance:



Jaamiah has a plan. She cannot describe the plan in detail, but she made this drawing to show how her plan will work.



Figure 7

2. Valencia does not really understand Jaamiah's drawing. Make a better drawing that will show more clearly what Jaamiah's tables will look like. You only need to make a quick freehand sketch to show what the table will look like.

The learners must draw a 3D version of the table, similar to Figure 10.

To understand how Jaamiah's table will work and to test if it will work well, you can build a small model of the table. Use corrugated cardboard to do this.

You will need three pieces of corrugated cardboard, each about 20 cm long and 10 cm wide. Decide how you will cut the pieces for the tabletop and the two supports. You can cut them with the corrugations along the width, as shown in Figure 8, or with the corrugations along the length, as shown in Figure 9.

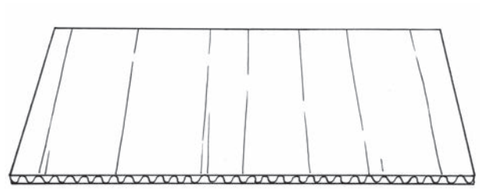

Figure 8: Corrugations along the width



Figure 9: Corrugations along the length

3. Build your model table and test it to see if it will work well.

4. How should the corrugated cardboard be cut to make the strongest top for your table, with the corrugations along the width or along the length?

   Along the length.

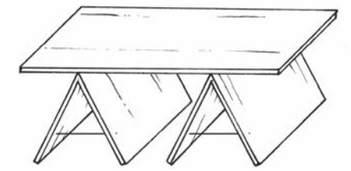

Figure 10

5. Copy Figure 11. Show on the drawing in which direction the corrugations should go to make the strongest supports for your table.

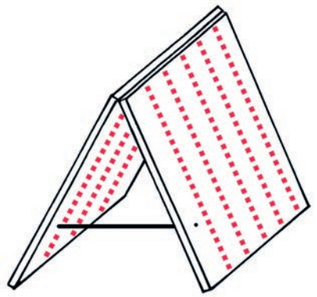

Figure 11

6. Now, think of ways to make the table stronger so that it can support bigger loads. The table in Figure 12 is not strong enough to support its load without bending.

   Suppose you have another sheet of corrugated cardboard with which you can make the table stronger. You can add the sheet as a second table top, as shown in Figure 13. Or you can cut the extra sheet in two pieces and make another A-frame support for the middle of the table, as shown in Figure 14.

   Which way of using the extra sheet will help the most to make the table stronger, the way shown in Figure 13, or the way shown in Figure 14?

   Figure 14, because the table is supported in the middle.



Figure 13



Figure 14

2.2 Different types of bridges



A beam-and-column bridge

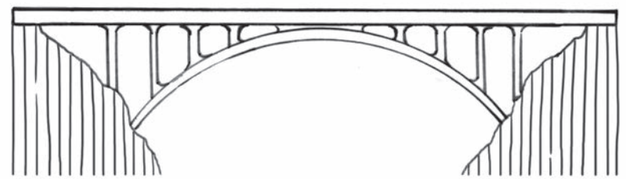

An arch bridge

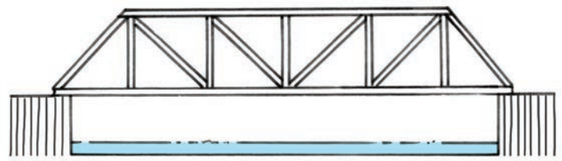

A truss bridge



A suspension bridge

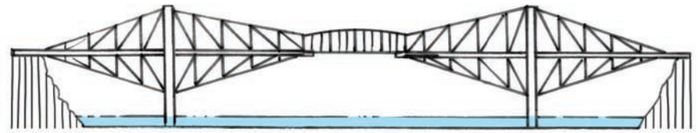

A cantilever bridge

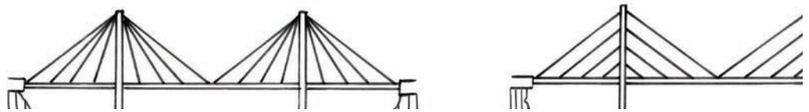

Figure 15: Different types of bridges

Investigate bridges LB p. 24

Look at Figure 16. A bridge needs to be built so that people can cross a river. The distance from point A to point B is about 30 metres.

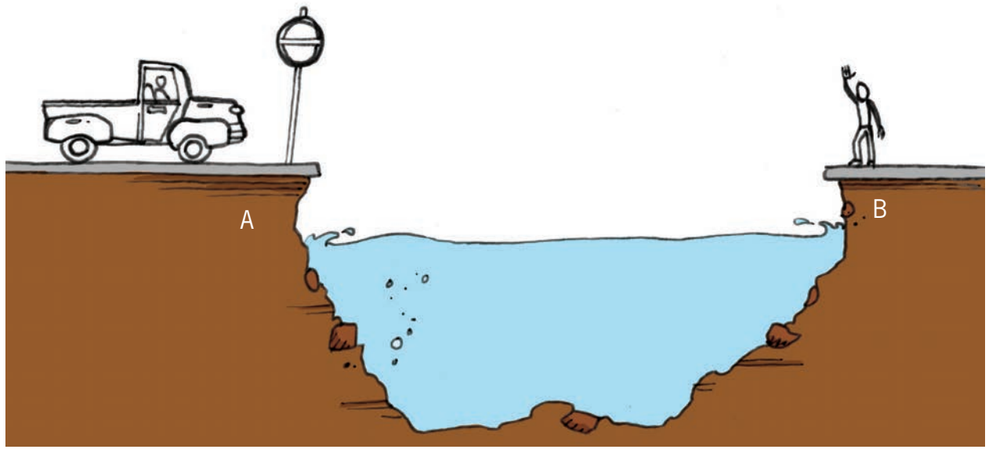

Figure 16

1. Do a quick sketch of Figure 16. Now, show on the drawing what the bridge could look like.

The learners must draw a supported structure.

2. Look at your drawing. In what way will the bridge be supported so that it will not bend when a heavy truck passes over it?

The bridge must have support structures underneath to hold it up under the load.

3. What materials do you think should be used to make the bridge?

Reinforced concrete or steel.

4. How wide should the bridge be?

Wide enough for two cars going in different directions to pass each other safely on the bridge. (The answer can also be: Wide enough for one car to pass safely over the bridge.)

5. How many cars can be on the bridge at the same time?

Two, if they have answered that in Q4; one if they have answered that in Q4.

You can easily make a small **suspension bridge** between two desks with sticky tape. When you do this, you use the pieces of tape as **cables**.

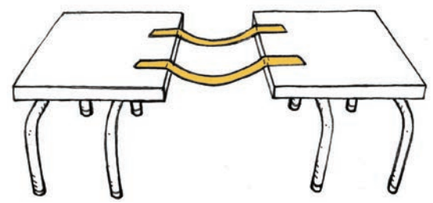

Figure 17

You can put strips of cardboard across the two cables to form a **deck** for the bridge.

6. Do you think this suspension bridge in Figure 18 will be strong enough to support a small bird walking on it?

Yes, it will support a small bird.

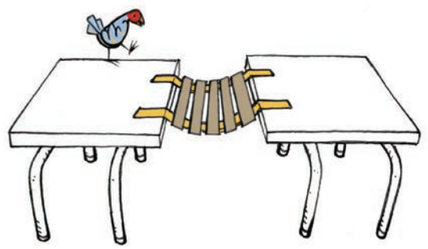

Figure 18

You can also easily build a small **cantilever bridge** between two desks. Put two pieces of corrugated cardboard on the desks, like the blue objects in Figure 19. Put an object like a book on one end of each cardboard sheet, so that they will not fall down.

LB page 25

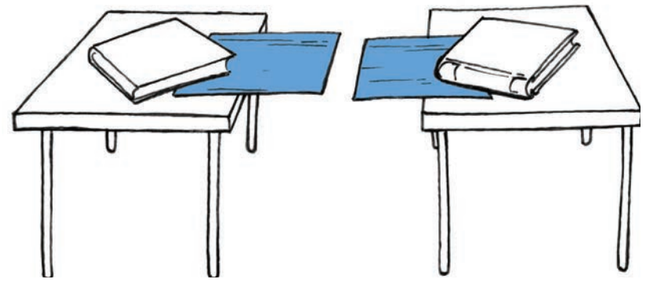

Figure 19

Now you now almost have a bridge, but there is still a gap.

7. How can you complete the cantilever bridge without moving the cardboard sheets or the desks closer together?

By placing another sheet of corrugated cardboard on top of the other two sheets.

In a suspension bridge, the cables are **anchored** on the two sides, the same way you pasted your sticky tape strips on two desktops. In most suspension bridges, the deck hangs from the cables. We can also say the deck is *suspended from* the cables.

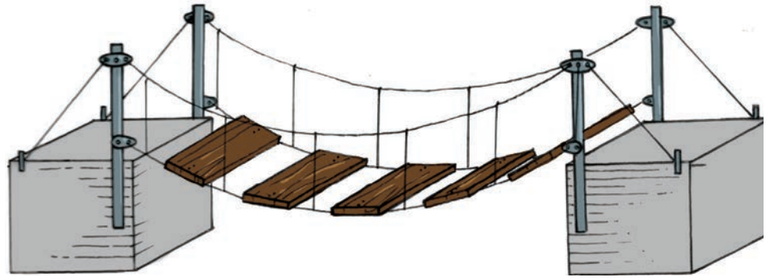

Figure 20

In a **cable-stayed bridge** the deck is also suspended from the cables, but the cables are anchored on support columns, not on the two sides of the bridge. To make a simple model of a cable-stay bridge, you can paste some pieces of string to a sheet of corrugated cardboard.

Turn the cardboard around so that the strings are at the bottom.

Pick up and hold all the string ends in one hand.

Step A

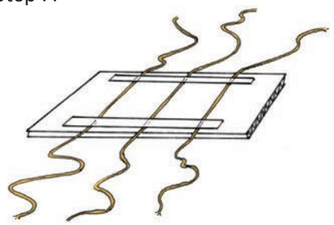

Step B

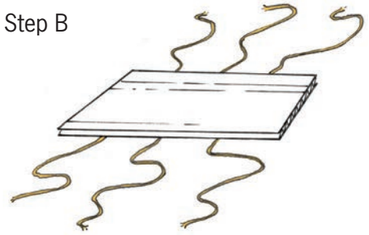

Step C

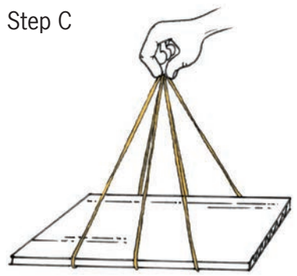

Figure 21

2.3 Making structures strong enough

Investigate what could go wrong in structures LB p. 26

1. Do you think it will work well to use a sheet of window glass for a tabletop?

   No, glass can crack or break very easily if something is dropped on it, or something too heavy is placed on it.

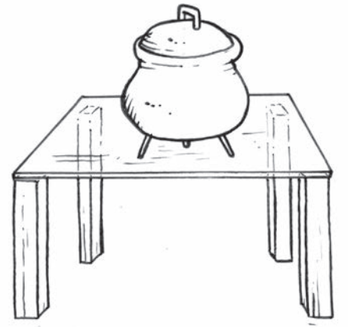

Figure 22: A table with a glass top

A glass top can easily crack or break, or fracture, when heavy objects are placed on it. There are also other things that could go wrong with structures.

2. What material was used to make the legs of the chair you are sitting on?

   This depends on what type of chair the learners are using. Either steel, wood or plastic.

3. Why will it not work to use rubber pipes to make the legs of a chair?

   Rubber will bend and not give support.

Tom made this plan for a model table with a round top. His plan is to make three bottles stand on their tops, with a round disk of cardboard on top of them.

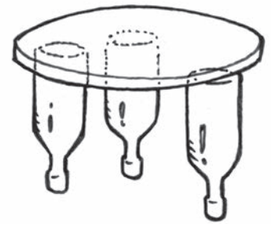

Figure 23: A table with a round top

4. Explain why this will not work well.

   The structure is unstable with the bottles placed upside down and not glued to the glass.

The following are examples of ways in which structures, like bridges or buildings, or parts of bridges or buildings, could fail to work.

- Some parts, or members, of the structure can **fracture**, or break apart.
- Some parts, or members, of the structure can **bend**.
- Structures or parts of structures can **topple over**.

5. The pictures in Figure 24 show different ways that bridges can fail. Describe what went wrong in each of the three cases, and how it could be prevented from happening again..

LB page 27

(a)



(b)



(c)



Figure 24

Figure 24a): The bridge needs to have supporting structures holding it up, and needs to be anchored to the river wall.

Figure 24 b): The centre span needs to be reinforced with iron bars in the concrete, or it needs to have an additional supporting column.

Figure 24 c): The supports on each side need to be wider than the bridge, and the bridge needs to be anchored to these supports to prevent it twisting.

6. A design for a small table is shown in Figure 25.
In what ways could this table fail to work?

Because the table is very tall and narrow, the legs are very close together. It can be easily knocked over, or if a weight is placed to close to the edge it will topple.

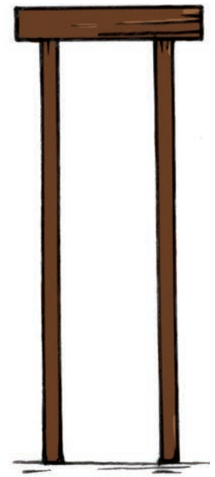

Figure 25

LB page 28

7. Figures 26 and 27 show a suspension bridge and an arch bridge.
In a suspension bridge, the deck of the bridge hangs from the cables that carry the load. Explain in what way an arch bridge is different from a suspension bridge.

In a suspension bridge, the weight is supported from cables overhead.

The cables are under tension.

In an arch bridge, the weight is supported by the struts and arch underneath, which are under compression.

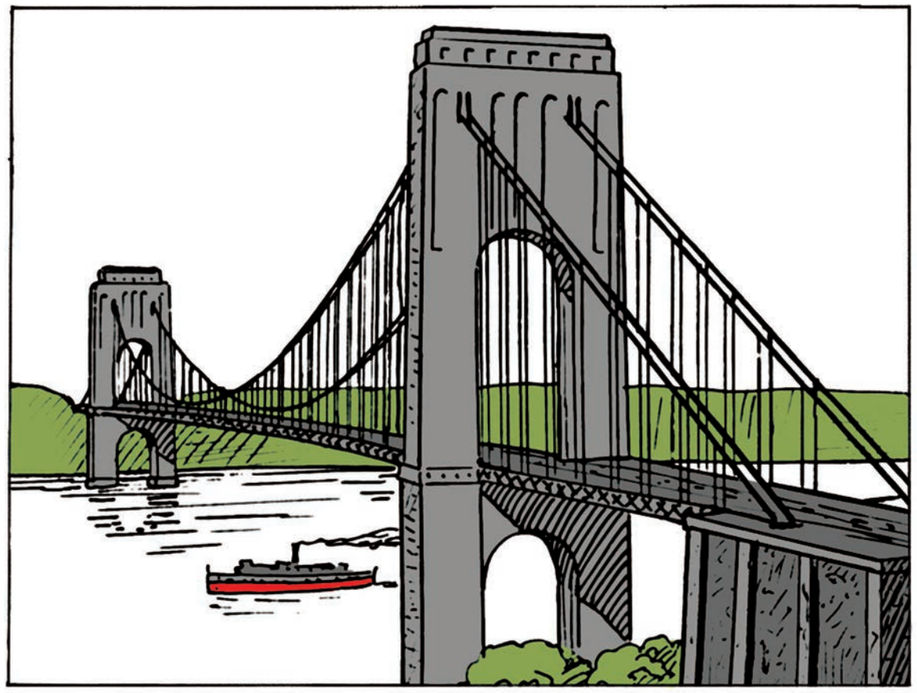

Figure 26

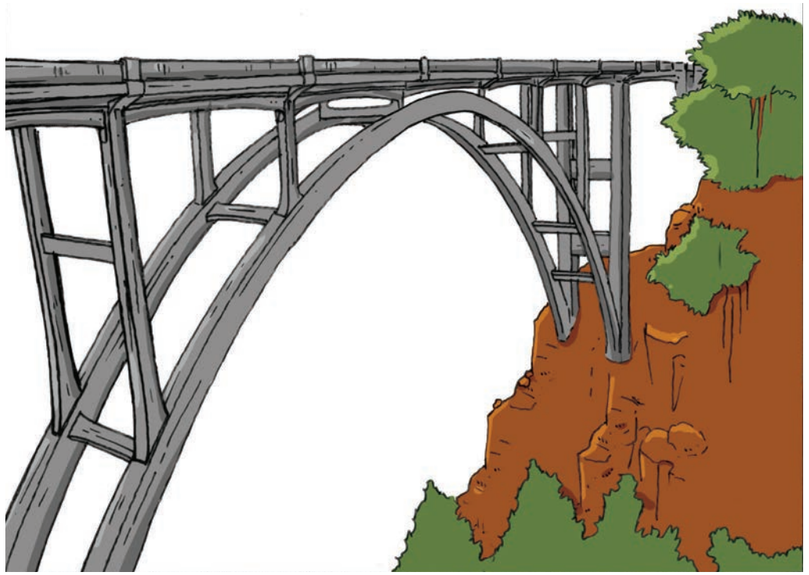

Figure 27

Homework: What have you learnt? LB p. 28

1. Where are lintels used in houses, and what are their purposes?

   Lintels are used to support the bricks above windows, doorways and other openings in walls.

2. Can arches be used instead of lintels when houses are designed and built? Make a freehand sketch to illustrate your answer.

   Yes, arches can be used to support bricks above a doorway.

Learners must make a sketch similar to this drawing:



3. What is the difference between a beam-and-column bridge and an arch bridge?

   A beam and column bridge rests on straight upright columns that can be placed in a river or gorge; an arch bridge is supported by an arch that is anchored on each side.

4. When will you use an arch bridge instead of a beam-and-column bridge.

   An arch bridge would be used when the bridge is too high to have supporting columns reaching the ground below.

Next week

In the next two chapters, you will make more sketches and learn new drawing techniques.

Chapter 3
Flat and isometric working drawings

LB page 29

In this chapter, you will learn about an important way to develop and communicate your ideas in Technology. You will start drawing freehand sketches. Then, you will learn about drawing one face of an object in two dimensions. Finally, you will learn how to draw an object showing three dimensions.

3.1 Line types and scale drawing 37
3.2 Single view flat 2D drawing 41
3.3 Isometric drawing 43

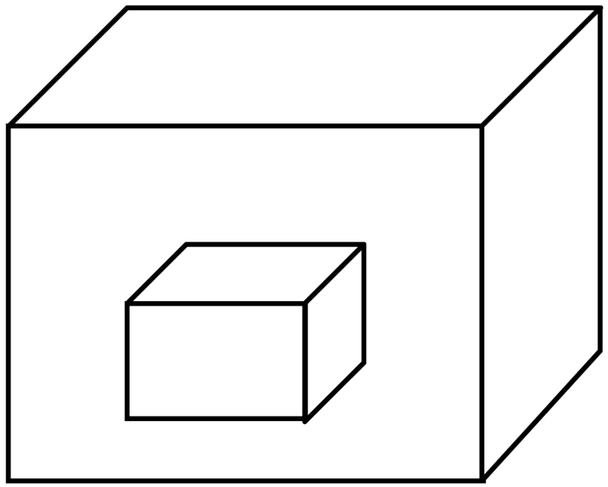

Figure 1

This chapter reintroduces the necessary skills of drawing to the learners. In Grade 7, the learners were taught 'How to say things with drawings' and in Grade 8, this skill is enhanced. Not all learners will have artistic ability, but they can all be shown how to communicate their ideas in Technology.

Materials needed for this chapter:

Pen, pencil, sharpener, eraser, 30 cm ruler

Compass

Protractor

Set squares (30° and 45°)

3.1 Line types and scale drawing

It is suggested that the first part of this section be emphasised as an introduction to the importance of drawing. The learners must understand that nothing can be built or manufactured without being planned. The learners can give examples other than an architect drawing for a house, such as industrial machinery, cars, ships and other manufactured items, even household objects. They must be *encouraged* to understand the need for accurate planning before building or manufacturing.

The basics of drawing plans are given first, and the learners must be able to differentiate between the types of lines they are going to use in the drawings. The teacher can utilise the blackboard to illustrate the uses of various lines.

To introduce **scale** the learners can be encouraged to think about the size of objects that are going to be built. A house, for instance, cannot be drawn to the exact size it will be when built, and an industrial machine is also too large to draw life-size. Figure 9 can be used to show the differences in scale.

You will be able to check if the learners understand the process by checking the exercise they complete on page 39. Mistakes can be erased and redone correctly.

3.2 Single view flat 2D drawings

This section can be introduced by showing the learners an object such as a box or book. The first sketch is free-hand and not to scale and should not present any difficulties.

The second sketch is more complicated: remind the learners that they only have to draw the front part of the object, but that they must show hidden lines. Ensure that they take note of the reduction in scale. When checking the drawings, you need to ensure that the hole that is the centre of the object is represented in their drawing with dashed lines. Monitor the class and assist the learners who might have difficulty visualising the front of the object by using the box or book example again.

3.3 Isometric drawing

Once again, it is recommended that you begin this lesson by using an object to demonstrate the difference between a flat 2D object, an oblique view and an isometric view. By holding the book or box up and tilting it to different perspectives the learners will get a better understanding of oblique and isometric views. By then referring the learners to Figures 13 and 14, you can show how an isometric drawing gives true dimensions, and that this is very important when drawing plans.

The learners are given two exercises to practice the technique. Both of these examples require scaling. They also require the learners to show hidden lines and the scale; ensure that the learners have worked out the scale correctly. The first example will help the learners if the scale measurements are done as a class exercise, but for the second drawing, the piano, they must work alone. The scale is more complicated as the division is not always a whole number. The learners must put in the measurements in their drawings using **dimension lines**.

They can be *encouraged* during this exercise with reminders that mastering these drawings and techniques will help them with their school work in many subjects!

LB pages 30–31

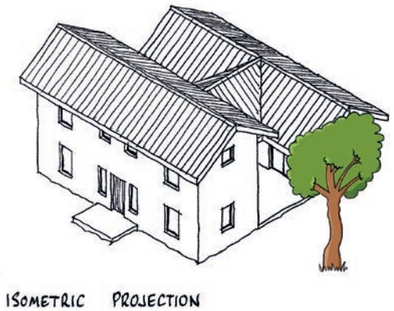

Figure 2

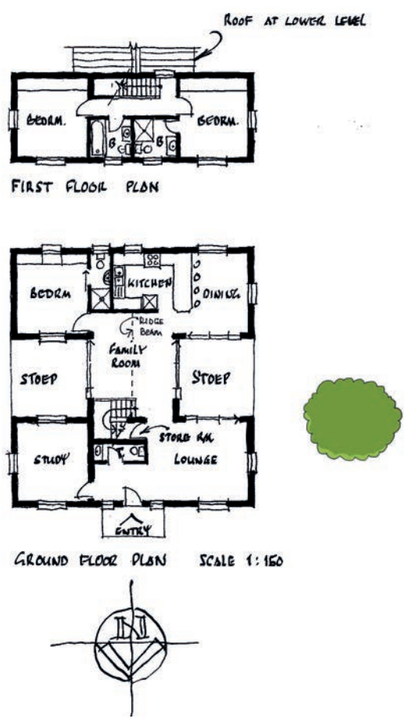

Figure 3

LB page 32

3.1 Line types and scale drawing

Even the easiest of building projects needs to be designed first. To do this, someone has to be able to draw the structure that is planned. Very few people are able to make something without having drawn it first. So let us have a look at the basic principles of drawing.

Different lines for different purposes

Construction lines

Construction lines are normally drawn to begin to make a drawing. They are feint, thin lines that will later be replaced by the outlines.

Example:



Figure 4

Outlines

These lines are also referred to as solid lines. They are slightly thicker and darker than construction lines.

Example:



Figure 5

LB page 33

Hidden detail

These lines are also known as hidden lines. These are lines you can't see when looking at the object. They are the same thickness as outlines but are broken.

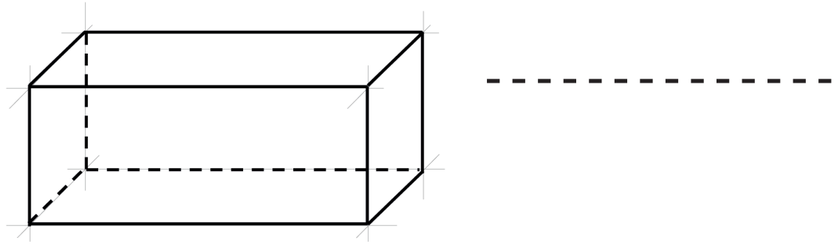

Figure 6

Centre lines

These lines show where the centre of a symmetrical object is, for example a circle. These lines are also called **chain dash-dot lines**.

When you need to drill a hole in an object, a centre line is useful because it shows you exactly where you should put the tip of the drill.

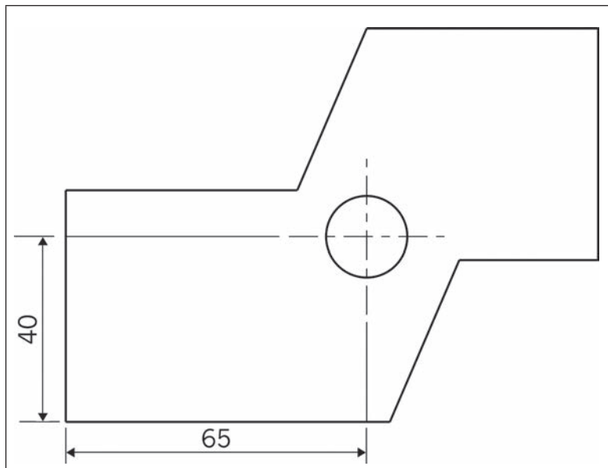

Figure 7



Figure 8

The symbol ø is used to indicate the diameter of a circle. The diameter is written at the end of an arrow that points to the centre of the circle.

Drawing to scale LB p. 34

It is not always possible to draw something according to its actual size in real life, because you might not be able to fit it onto the paper you use. So you need to be able draw something to a different **scale**. But how does this work?

- **Scale 1:1** This is full scale and means that a centimetre in your drawing shows a centimetre in real life.
- **Scale 1:2** This means that a centimetre in your drawing shows two centimetres in real life.

The drawing below shows the same object drawn to different scales.
Measure the bottom line on the first and second drawings, to check that the second drawing is really to a scale 1:2.

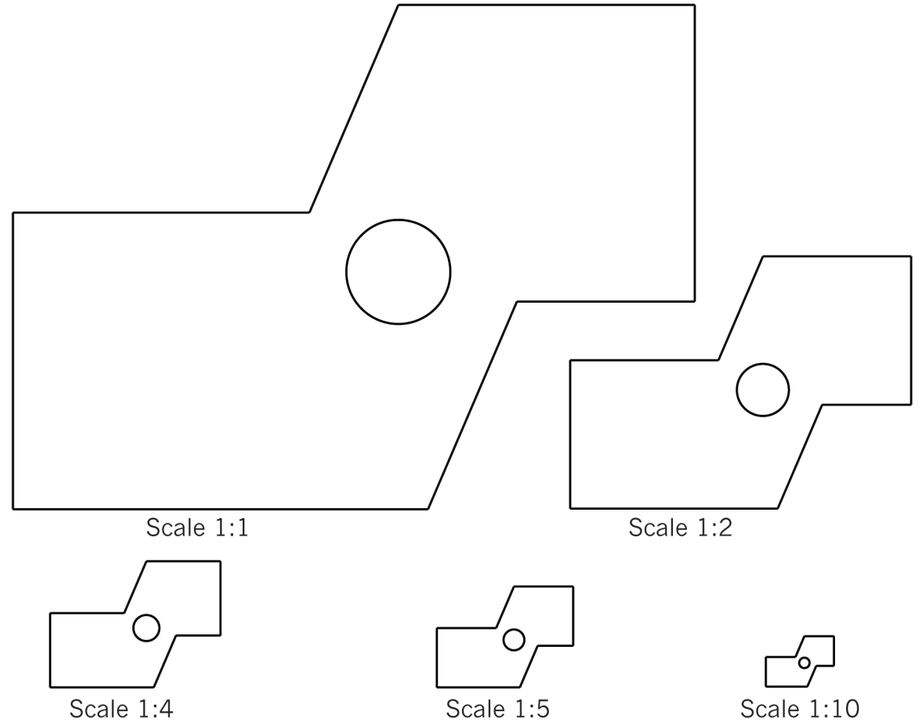

Figure 9

Look at the drawing of an object on the right.

LB page 35

Scale 1:10

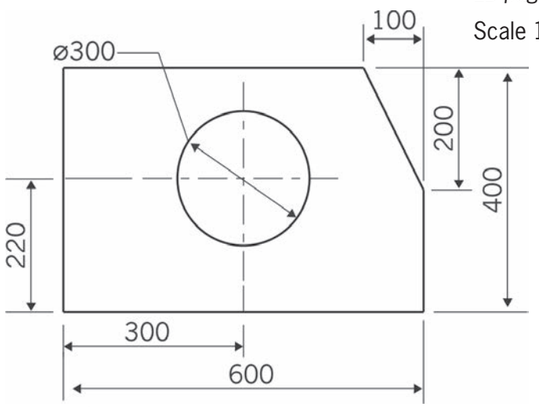

Figure 10

1. Redraw this object to a scale of 1:5. Use a ruler to make this drawing and all the other drawings in this chapter. Use a compass to draw the circle.
   - Show dimensions.
   - Show the centre lines of the circle.
   - Show the scale.

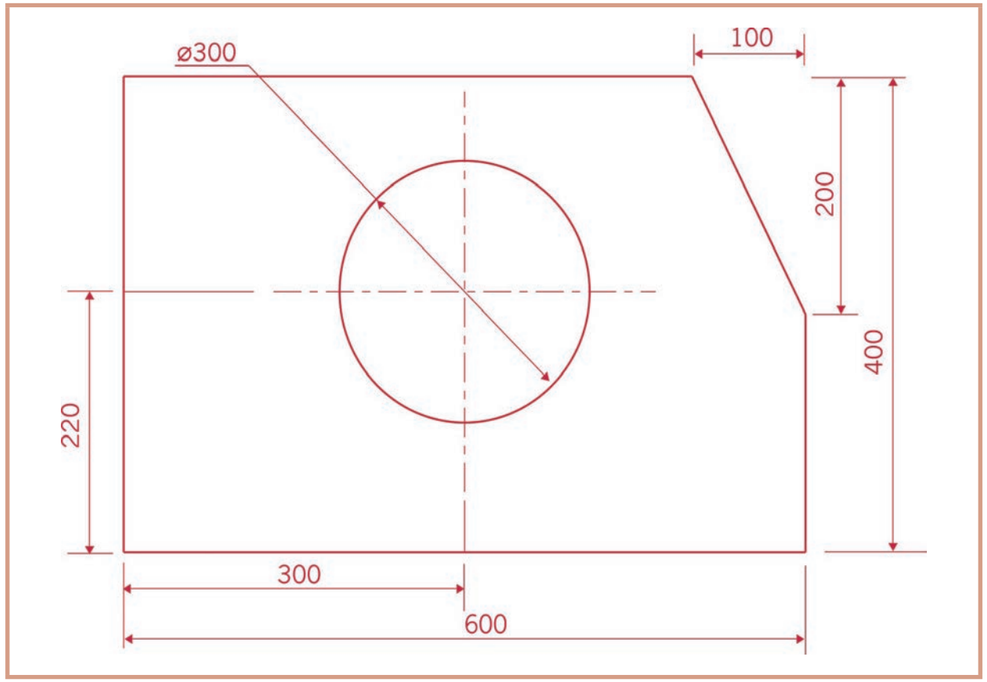

3.2 Single view flat 2D drawing

In the drawings that you made in the previous lesson, you showed the front, the side and the top of objects. Now you will make some drawings where you only show the front of an object.

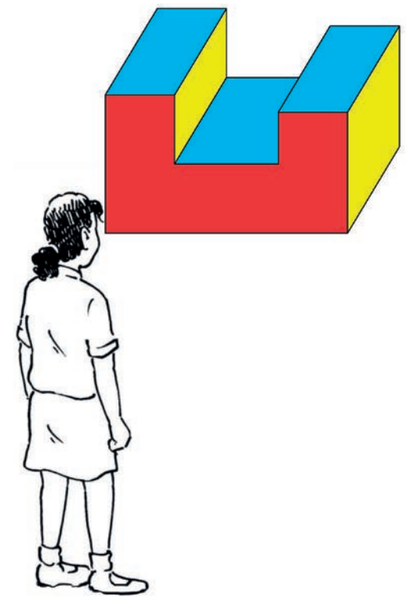

Figure 11

Drawing the front of an object in 2D — LB p. 36

1. Look at Figure 11. The learner only sees the red part of the block. Make a sketch of the red part on grid paper.

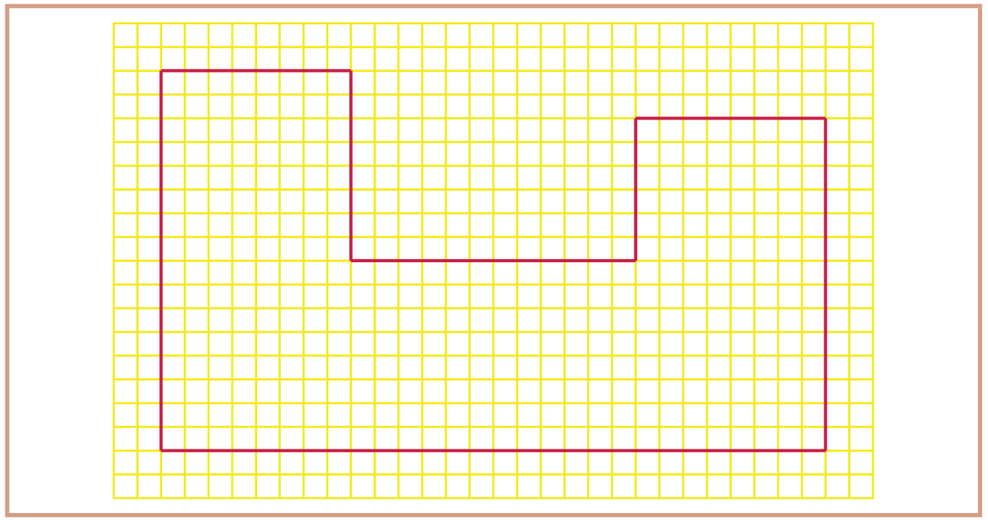

2. Make a 1:10 scale drawing of the front part of the object in Figure 12 below.
   - Show hidden lines.
   - Show dimensions.
   - Show the scale.

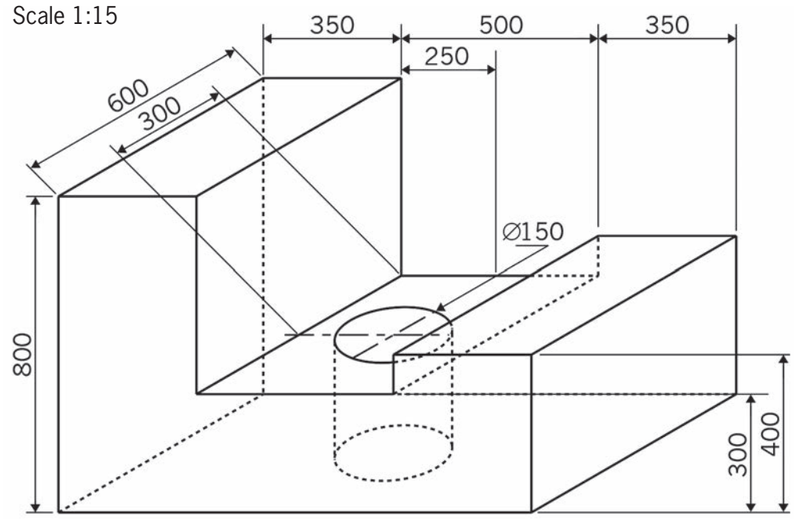

Figure 12

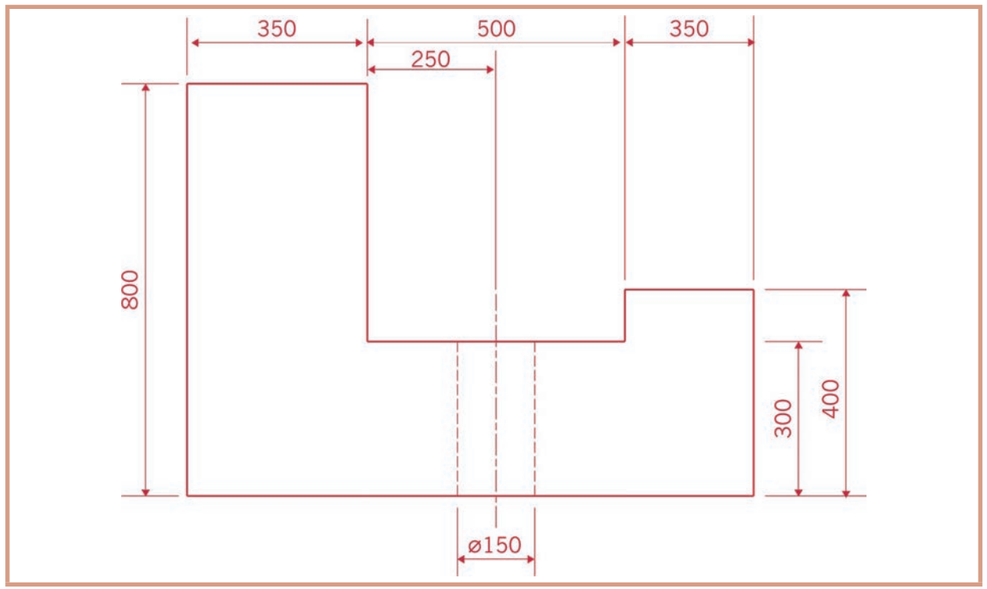

If you have time left at the end of this lesson, start reading about isometric drawing on the next page.

3.3 Isometric drawing

The differences between a 3D oblique drawing and an isometric drawing are demonstrated in the examples below. Both drawings are of the same object.

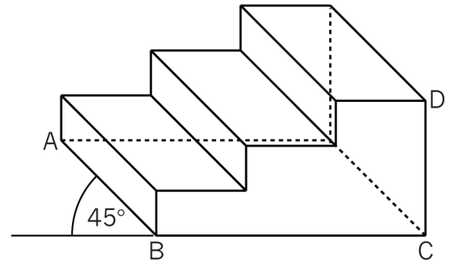

Figure 13: Oblique view

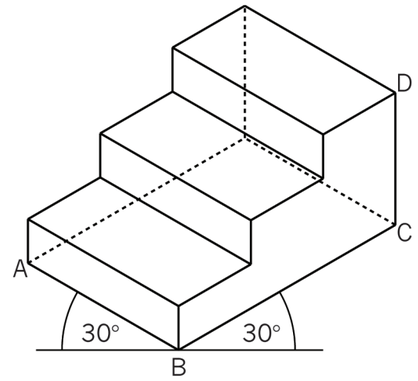

Figure 14: Isometric drawing

The oblique drawing shows the true lengths of lines BC and CD, but not the true length of AB.

The isometric drawing shows the true lengths of the lines AB, BC and CD.

The word "isometric" comes from the words "iso" and "metric".

"Iso" means "the same", and "metric" means "measurement".

Make isometric drawings **LB p. 38**

1. Make an isometric drawing of the chalk box in Figure 15 on isometric grid paper. Use a scale of 1:4.
   - Show hidden lines.
   - Show dimensions.
   - Show the scale.

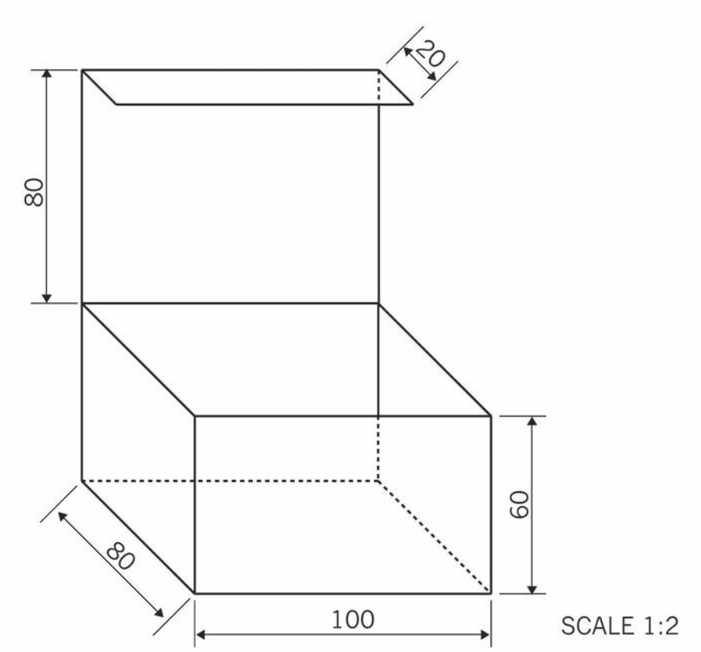

Figure 15

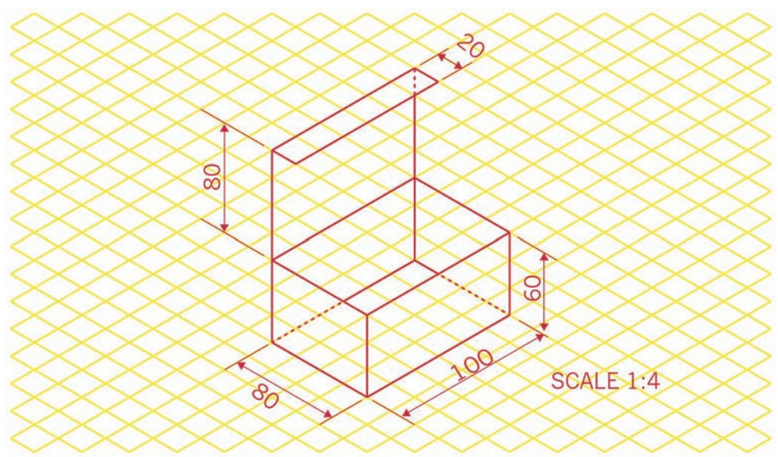

2. Make an isometric drawing of the piano in Figure 16 on isometric grid paper. Use a scale of 1:25.
   - Show hidden lines.
   - Show dimensions.
   - Show the scale.

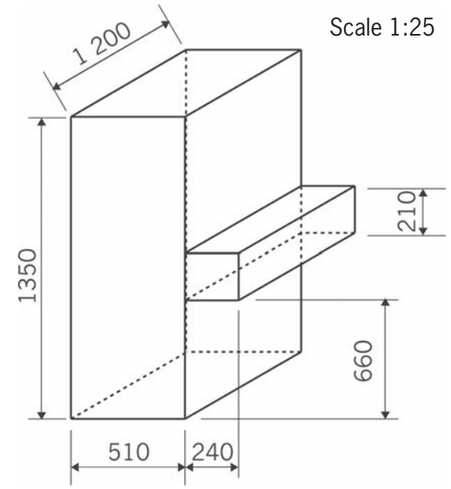

Figure 16

Next week

In the next chapter, you will learn to make drawings that show what you really see. Those drawings are artistic drawings, and they use some special techniques that you will learn.

Chapter 4
Perspective drawing

LB page 39

4.1 Double vanishing point drawing 50
4.2 A more difficult double vanishing point perspective drawing 53
4.3 Make drawings look more realistic using shading and texture 55



Figure 1: Everything we see around us is in perspective.

This chapter follows on the previous chapter (Flat and isometric drawings) as well as the single vanishing point drawing they were taught in Grade 7. Learners are introduced to double vanishing point perspective, and through practical drawings will advance from simple sketches to more complicated examples. In the third part of the chapter, they investigate the use of shading to create realistic drawings.

The basic idea in this chapter is to increase the learners' skills in being able to draw what they see. Sketching and drawing are important skills for the learners to develop, and even for less talented learners the basics can be taught. As mentioned in Grade 7, drawing is particularly important in Technology as it helps the learners to communicate and share ideas and design details.

Materials required for this chapter:

pen, pencil, sharpener, eraser, 30 cm ruler

compass

protractor

set squares (30° and 45°)

4.1 Double vanishing point drawing

In this section, the learners will first recap their knowledge of single vanishing point perspective, as well as the drawing techniques they learnt in Grade 7 and previous chapters. Particularly important are the three types of lines used in these drawings: solid lines for outlines, feint lines for construction lines and dashed lines for hidden edges.

This revision leads them to examples of double point perspective. This can be introduced to the learners by showing that in the single point perspective, the box is **face on** to the illustrator; in double point perspective the box is in an **isometric** position to the illustrator. Using the examples from Figures 4 to 6, the learners are required to draw a simple block using double vanishing point perspective. You must ensure that the learners can do this step correctly, as the following exercise is more difficult. They should erase any mistakes and redo the drawing until they have it correct. Also, ensure that they leave construction lines visible, as this assists them to check their drawings and remember how they drew it when they revise it later.

4.2 More difficult double vanishing point drawing

This drawing looks a lot more complicated, but you should encourage learners to visualise the 'block' without the cut-out, to assist them with this exercise. Take them through the examples showing them how the block is drawn first, then the cut-out portion is drawn in later. Note that in this exercise **dimension lines** are given: the learners must use their rulers to measure the distances accurately when drawing the object.

Once the learners understand the process, *encourage* them to practise the skill in their spare time, using common objects like tables and cupboards.

4.3 Make drawings look more realistic using shading and texture

This section can be very exciting for the learners, as they will learn skills that they see in books, comic books and magazine illustrations. The illustrations give excellent examples of the basic techniques of hatching, cross-hatching, dots and shading. The learners will want to experiment with these techniques, and this is to be encouraged. Even learners who are not very artistic will find that their drawings look professional using these techniques.

Figure 20 is a perfect example of a combination of the various principles and techniques; in the exercises on page 45 and 46, they can practise the basics of shading before creating their own drawings.

There are no questions for the learners to answer in this chapter, so it is very important that you ensure they understand the principles taught in all three sections by checking their sketches. Mistakes not corrected now will impact on their work later. It must be *emphasised* that practise is the best way to perfect drawing, and the learners will find this skill very helpful in the Technology curriculum for the balance of Grade 8 and Grade 9.

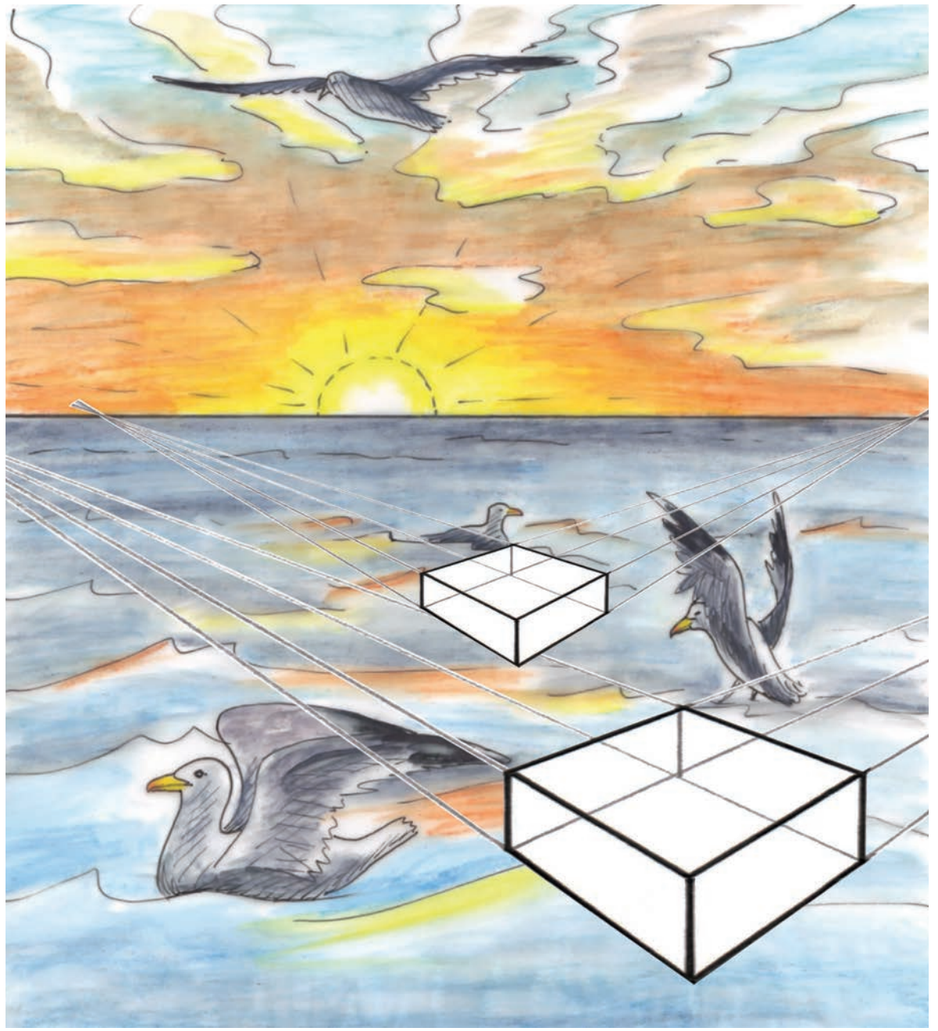

Figure 2: Where are the vanishing points for each box?

LB page 41

4.1 Double vanishing point perspective drawing

You were introduced to single vanishing point perspective in Grade 7. You will now go a bit further and look at double vanishing point perspective. Perspective views are often used by artists to sketch an object to try to represent what the human eye really sees.

If you stand looking out over the ocean, a big dam or a flat land area, you will see a horizontal line where the sky and water or land meet. This is known as the horizon.

To make a perspective drawing, you need to think of where the horizon line could be on your drawing.

In Grade 7, you learnt how to draw a box in single vanishing point perspective, as shown by the drawing below.

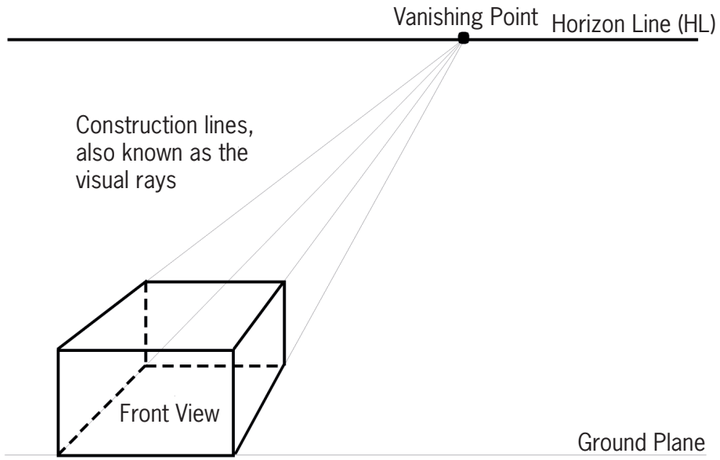

Figure 3

Using two-point perspective LB p. 42

In a double vanishing point perspective drawing there are two vanishing points on the horizon line. In Figure 2, there is a double vanishing point perspective drawing of a box.

1. (a) To make a double vanishing point perspective drawing of a box, you can start by drawing a horizon line and one vertical edge of the box as shown below.

   (b) Then draw construction lines from the top and bottom of the vertical edge to two vanishing points on the horizon line.

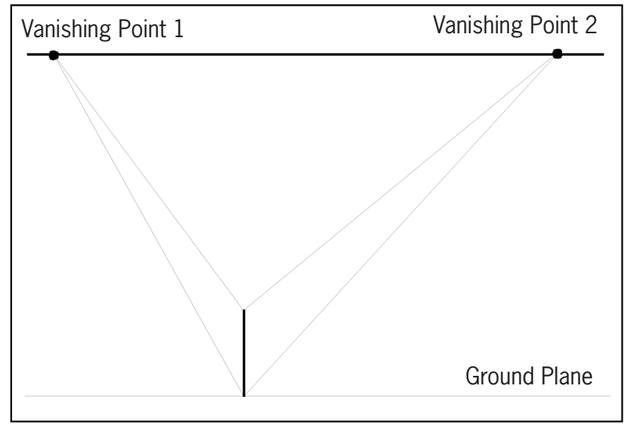

Figure 4

2. (a) Once you have done this, you have to mark off another edge of the block on the construction lines as indicated in Figure 5 at A and B.

   (b) From points A and B, draw construction lines to vanishing point 2.

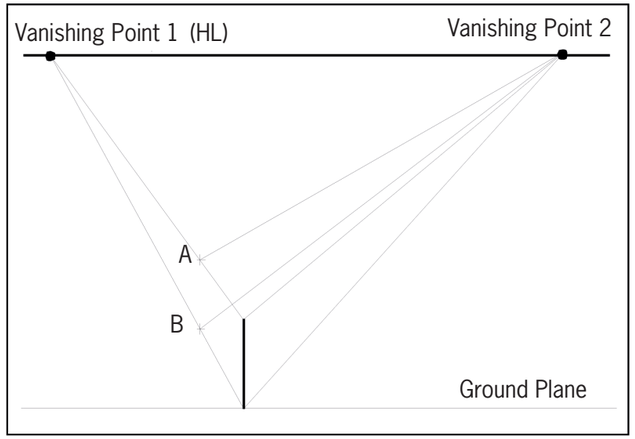

Figure 5

LB page 43

3. (a) Now mark off another edge of the block on the construction lines going to vanishing point 2 at C and D as in Figure 6.
   (b) Draw construction lines from points C and D to vanishing point 1.

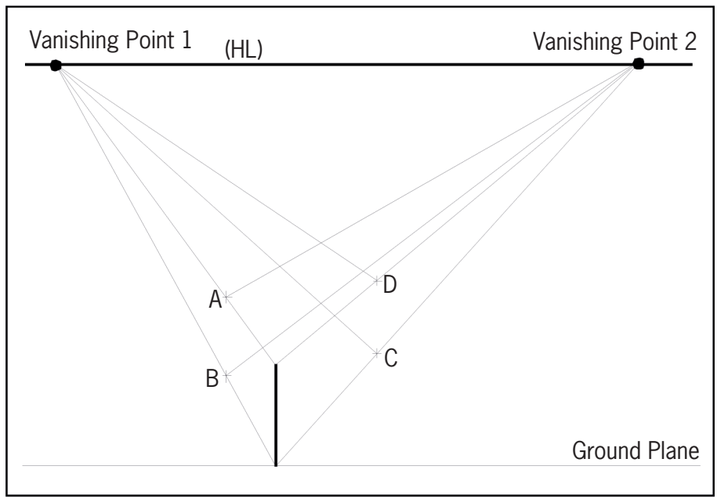

Figure 6

4. Make your own double vanishing point perspective drawing of a block. Draw in your solid lines, as indicated on the block drawing in Figure 3.

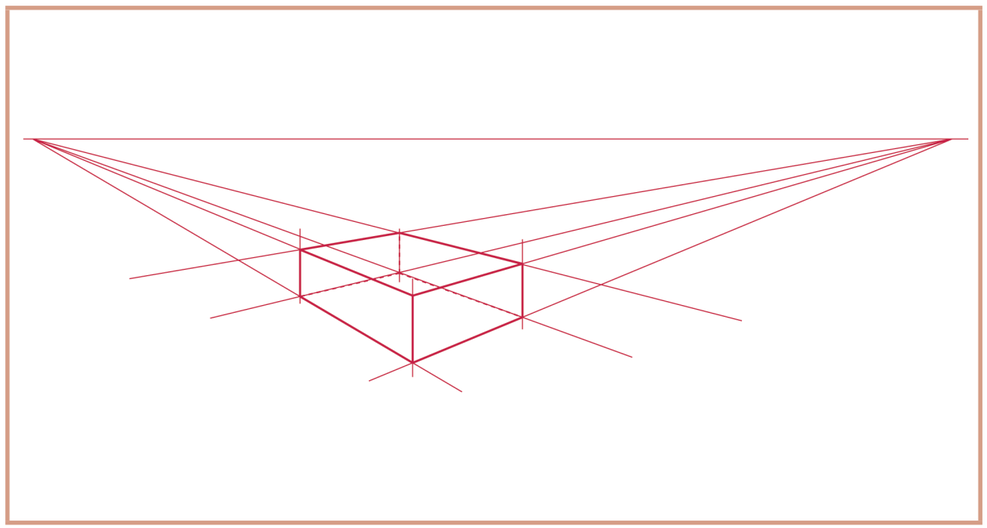

4.2 A more difficult double vanishing point perspective drawing

You will now make a double vanishing point perspective drawing of a block with a piece that is cut out, as shown in Figure 7.

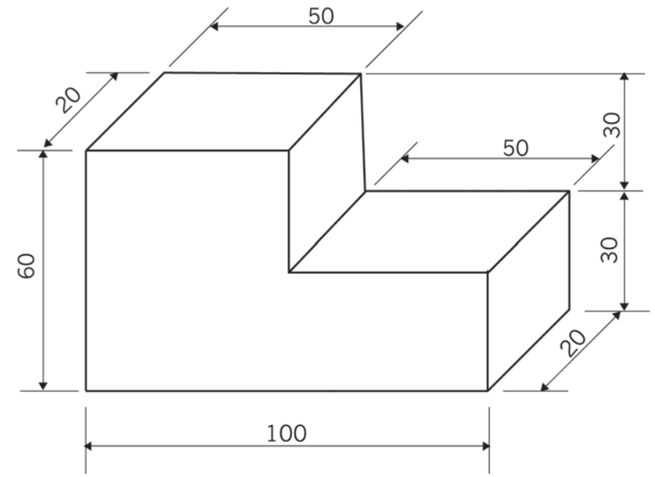

Figure 7

Vanishing point perspective of a block with a cut-out LB p. 44

1. It is best to draw the block first, without the cut-out, as shown below.

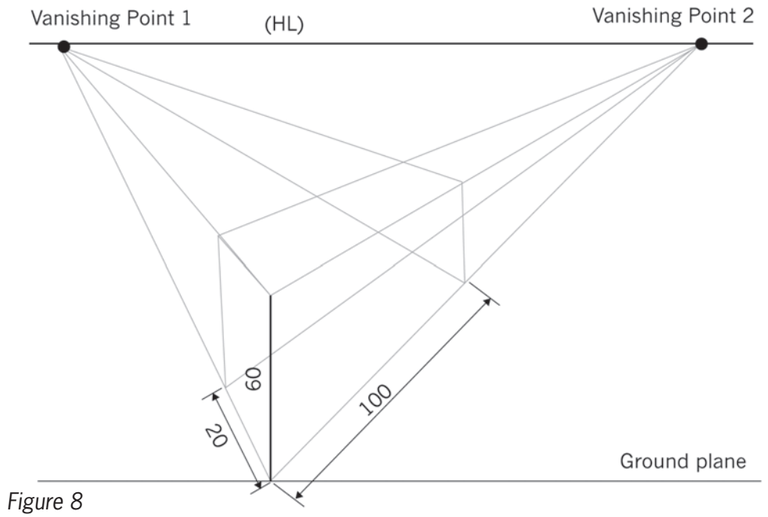

Figure 8

2. Then mark the cut-out, as shown below.

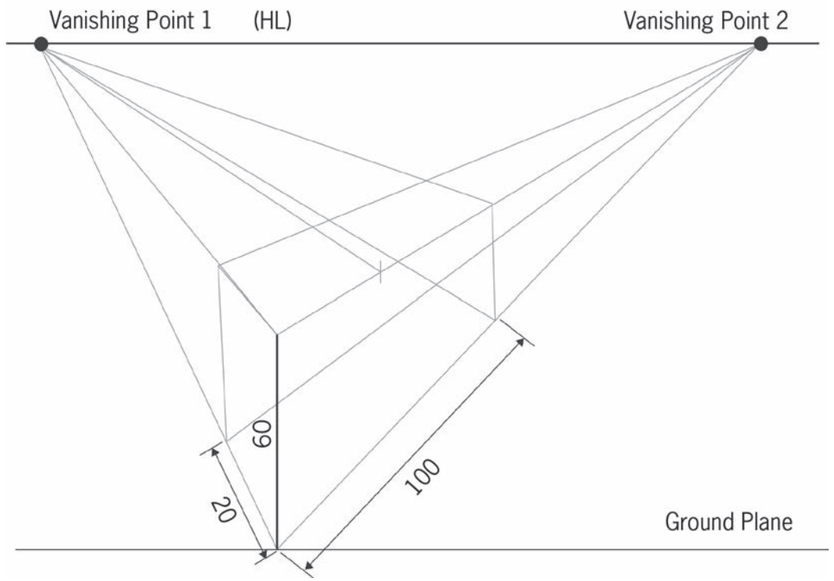

Figure 9

3. Make and complete your own double vanishing point perspective drawing of the object in Figure 7. Draw in solid lines where necessary.

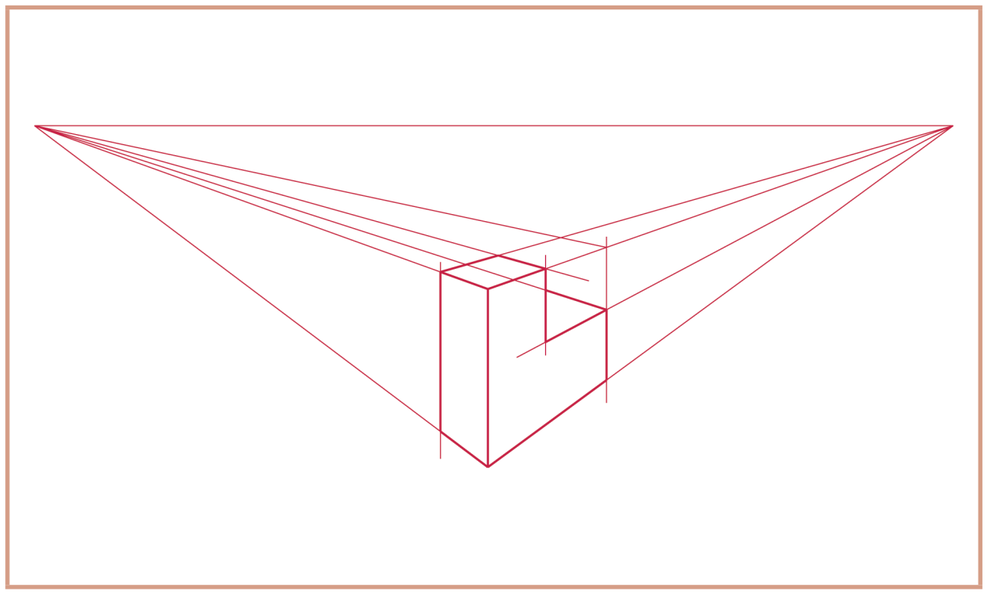

LB page 45

4.3 Make drawings look more realistic using shading and texture

When you draw a picture of an object, you can use **perspective** to make the picture look more life-like or real.

When you've drawn your object in perspective, you can make it look even better by using **shading**. Shading is a way of showing that something is a **three-dimensional** shape, instead of a **two-dimensional** shape.

Compare Figures 10a and 10b, as an example.

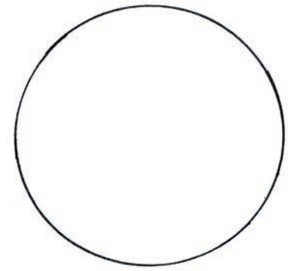

Figure 10a: a circle (two-dimensional)

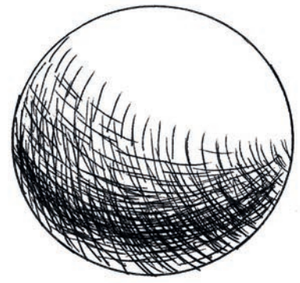

Figure 10b: a sphere (three-dimensional)

The basic principle of shading is light and shadow, as you can see in Figure 11. The position of a light source relative to an object determines which parts of an object are lighter and which parts darker.

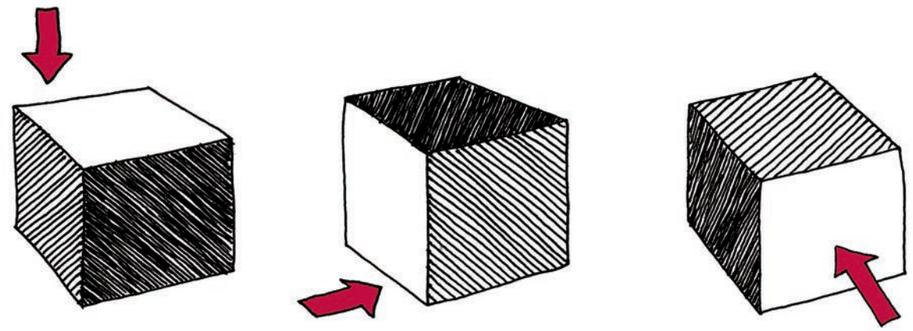

Figure 11: The position of light shining on the cube determines which parts will be darker or lighter. The position of the light on these cubes is shown by the red arrows.

There are a number of techniques that you can use to shade an object, regardless of the drawing tool you are using, such as a pen, pencil, coloured pencil, crayon, charcoal, brush or ink.

Hatching

Hatching means that you draw more-or-less parallel lines on the part of the object you want to be in shadow. The closer your lines are together, the darker you can make the shadow. Hatching works well with any drawing tool that can make lines.



Figure 12: Different shades created by hatching

Cross-hatching

Cross-hatching is like hatching, except that you draw 2 sets of lines, crossing each other. Cross-hatching also works well with any drawing tool that can make lines.



Figure 13: Different shades created by cross-hatching

Dots

Instead of drawing lines, you can use your pen, pencil or any other drawing tool to make dots for shading. The closer the dots are together, the darker the shade will be.

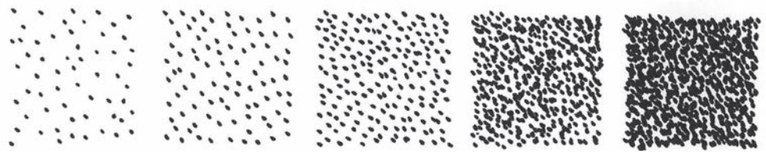

Figure 14: Different shades created by dots

Ink washes

You can dilute ink with water to create different shades. A lot of water and a bit of ink will make a lighter shade and a lot of ink with a bit of water will make a darker shade. Once you've mixed the ink and water, use a brush to apply the ink. If you don't have ink, you can use watercolour paint in the same way.



Figure 15: Different shades created by an ink wash and a brush

Here are examples of basic forms that have been shaded using these different techniques:

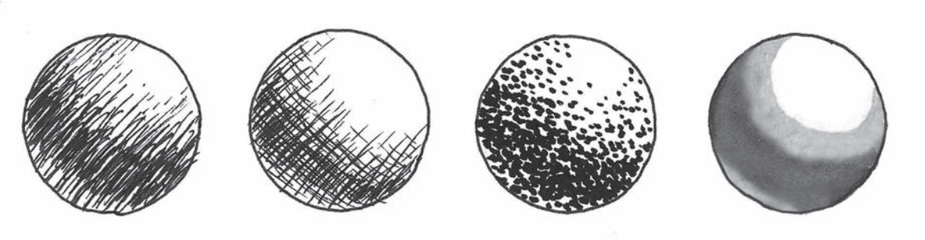

Figure 16: A sphere

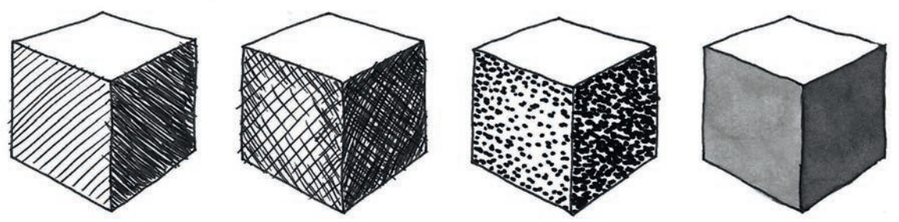

Figure 17: A cube

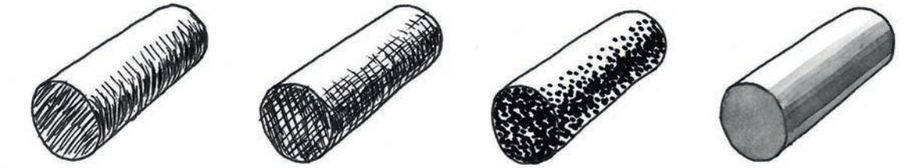

Figure 18: A cylinder



Figure 19: A cone

LB page 48

Below is a much more complex shape that has been drawn by an artist using a combination of shading techniques:



Figure 20: Portrait of a man in a suit

Drawing exercises LB p. 48

1. Create 5 different shades using one of the shading techniques you've learnt about.
2. Figure 21 is a line drawing showing a tree, a house and a car. It was drawn by combining different basic shapes. Make a copy of this drawing and shade it in. You can use any of the shading techniques you've learnt about in this chapter.

.

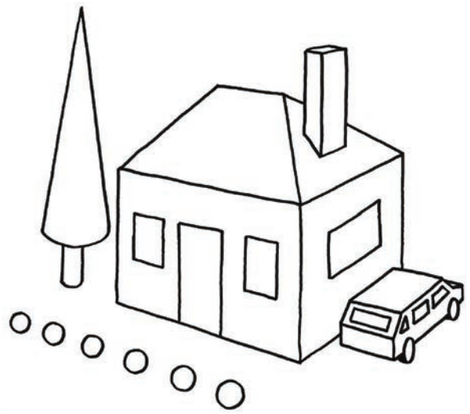

Figure 21

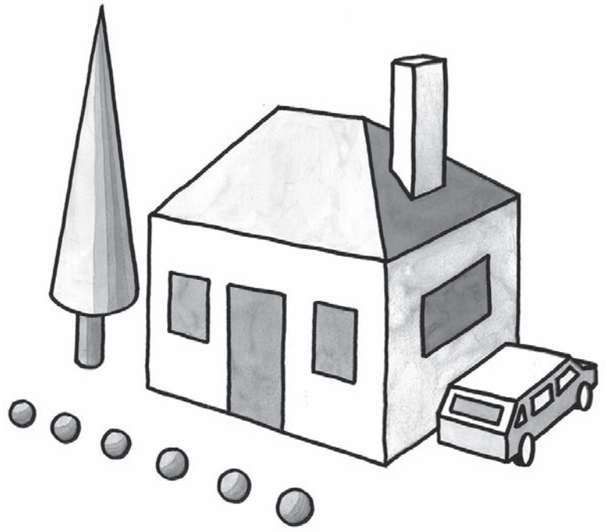

Next week

In the next three chapters, you will learn about different ways to change the way that things move, for example using gears and cranks.

Chapter 5
Wedges, wheels and gears

LB page 49

In this chapter, you will learn how wedges, inclined planes, wheels and gears can change the direction and size of a force. These things are all called simple mechanisms. Different simple mechanisms can be used in combination with one another to create more complicated machines, like bicycles or cars.

5.1 Inclined planes and wedges 64
5.2 Wheels 67
5.3 Gears 70

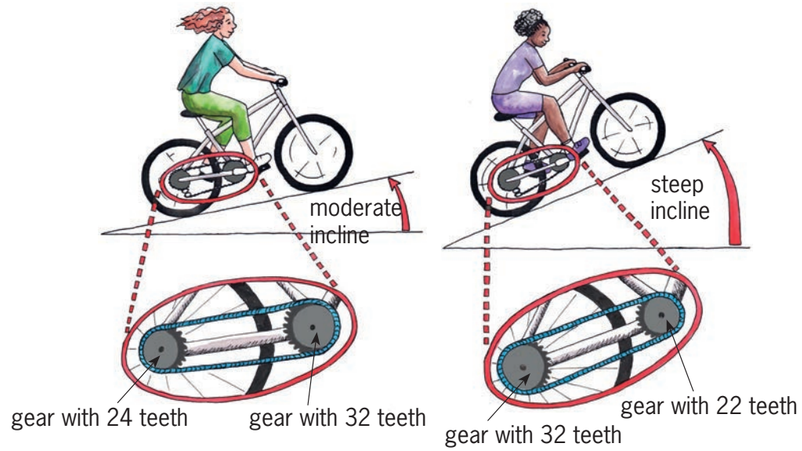

Figure 1: You use different combinations of gears on a bicycle when you cycle up a moderate slope or a steep slope. Why?

Gears make it easier to climb hills by giving a mechanical advantage.

Words to talk about hills and roads going upwards

When a road is flat, you say that it is **level**.

When a road goes up or down, you say that it has a **slope**, a **gradient**, or an **incline**.

When a road goes slightly upwards, you say it has a **gentle** incline.

When a road rises more quickly, you say that it has a **moderate incline**.

When a road rises up sharply, you say that it has a **steep** incline.

5.1 Inclined planes and wedges

The introduction is very important to set the scene, especially when it comes to understanding how gears will give a mechanical advantage. The revision that the learners do at the beginning of the lesson will set the scene. Make sure they remember and understand the difference between mechanical advantage and distance advantage.

The questions on page 52 are a good guide to the practical understanding of **inclined planes**.

The similarity in shape between an inclined plane and a wedge can be used to introduce the section on **wedges**. Once the learners have grasped the relationship between input force and input distance, you can refer back to the inclined planes in the previous section. This will be assisted by the illustration of the house being levelled with the use of wedges. This is a perfect way to emphasise **output force**, as the house is lifted.

5.2 Wheels

The importance of wheels in our history is a good way to introduce this section. Wheels have changed the course of technology, and therefore the history of civilisation, something that they can get excited to discuss.

The practical examples are easy to follow, but you must ensure that the learners understand the **principles of rotational movement**, **linear movement** and **friction**, as these subjects will feature very strongly in the Technology curriculum.

A bicycle is used to demonstrate these principles, and the learners will be able to identify with the examples given. (It would be ideal if you could bring a bicycle to the class to demonstrate!)

The group discussion must be closely monitored, and then they can write down the answers individually in their workbooks. You will be able to assess each learners' understanding very accurately from questions 1 and 2.

5.3 Gears

Gears can be closely compared to levers, you can introduce and emphasise this relationship at the beginning of this section. Once the learners understand that gears work on this principle, it will be easier to introduce the concept of gear ratios.

Questions 1 to 6 will make the learners think about the gears, how they work with one another, and also introduce ratios (question 5). You can demonstrate the answers to these questions by using lids from two jars and rotating them next to each other. Use a bottle top and a jar lid for question 5.

Similarly, to demonstrate idler gears, two bottle tops and a jar lid will work perfectly.

Gear ratios are discussed as a separate section following this one, but the learners will already have an idea of how they function from question 5 on page 59.

In this section, the learners will learn the technical aspects of gear ratios, and how to calculate them. It is important that they understand the methods used to calculate the ratios, as they will need this information for future work.

The answers the learners give to questions 1 and 2 are extremely important; if there are any incorrect answers it is recommended that the class be taken through the process again until you are sure all the learners are comfortable with the calculations. You can vary the figures to make sure that the process they follow is correct, and they aren't simply repeating their earlier answers.

NB: Some learners, as well as some teachers, may disagree with the definition of gear ratios given on page 61, as it contradicts the way one talks of a high or a low gear on a car or a bicycle. If that happens, do not tell the learners that they are wrong and the definition is right. Rather explain to them what is on the following page, and make copies of the page for them.

Talking about gears in everyday language, and calculating gear ratios

The definition of gear ratio is a convention, which means it something people agreed on, like the spelling of a word. It is not an absolute truth. The people who decided on the convention for how gear ratios should be calculated were scientists and engineers. Unfortunately, they did not pay attention to the way that other people talk about gears in everyday language, when they made this convention.

An example of a spelling convention:

In South Africa and Britain we write "colour", but in America they write "color".

You have good reason to be annoyed at them for confusing you!

In everyday language, you use the descriptive words "low" and "high" to talk about gears selected on a car or bicycle. In a car, you use a low gear (second gear) to drive slowly up a very steep hill, and you use a high gear (fifth gear) when you drive fast on a flat road. When you cycle on a flat road, you can select either a low or a high gear. If you select a low gear, you will pedal fast but with a light force. If you select a high gear, you will pedal slowly but with a heavy force.

So in everyday language, a low gear means that the input rotational speed (of the engine or the pedals) is fast compared to the output rotational speed (of the wheel). In other words, the output rotational speed is slow compared to the input rotational speed. That means if you divide the output rotational speed by the input rotational speed, you will get a small answer.

Unfortunately, the scientists or engineers who decided on how to calculate gear ratios, defined gear ratios the other way round. They defined gear ratio as input rotational speed divided by output rotational speed (see the formula on page 61):

$$\text{gear ratio: } \frac{\text{rotational speed of input axle}}{\text{rotational speed of output axle}}$$

The following table shows how the gear ratios of a motor car are shown in a motor car magazine.

Gear	1st	2nd	3rd	4th	5th
Gear ratio	4.1	2.2	1.5	1.1	0.9

Note that the highest gear (5th) has the smallest value of the gear ratio.

A useful way to think of the definition of gear ratio is to say that it is the number of times that a car's engine or a bicycle's pedals have to rotate for the wheels to rotate once.

LB page 50

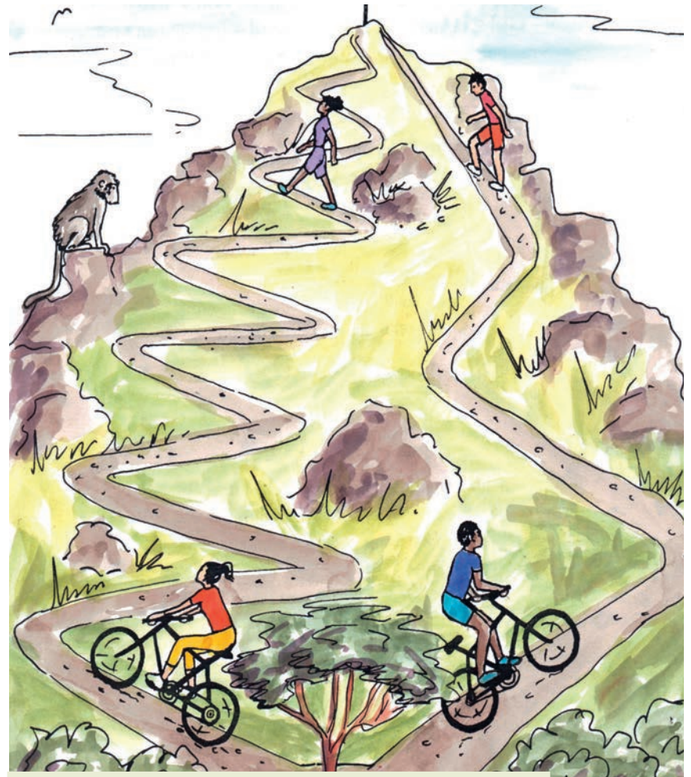

Figure 2: Which path would you take up the mountain? Which path would take longer?

Both paths go up the mountain. The path on the left is longer, but it is easier to climb up since it isn't so steep.

5.1 Inclined planes and wedges

LB page 51

Revision: Mechanical advantage

In Grade 7, you learnt how levers, pulleys and cranks can help you to move things. To get an object to move, you need to push it or pull it. A push or pull is called a force. That force will make the object move over a distance. Force and distance are the two important things that are changed by a mechanism.

Levers, pulleys and cranks are different types of **mechanisms**. In this chapter, you will learn about more types of mechanisms.

Some mechanisms change a small input force over a large distance into a large output force over a small distance. You can say that the mechanisms have a **mechanical advantage**, but a **distance disadvantage**. You get a mechanical advantage when a machine makes it easier to lift or move something.

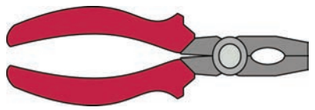

Figure 3: A pair of pliers that give a mechanical advantage.

Other mechanisms change a large input force over a small distance, into a small output force over a large distance. You can say that the mechanisms have a **mechanical disadvantage**, but a **distance advantage**. You get a distance advantage when a machine makes something move further.



Figure 4: A pair of kitchen tongs that give a distance advantage.

Whenever you look to see how a mechanism works, try to understand what is happening to the input force and the output force. Also try to understand what is happening to the input distance and the output distance. A distance advantage is often also a speed advantage, because if something moves further in the same time, it also moves faster.

Inclined planes

LB page 52

A road that goes up steeply can be called an **inclined plane**. The roof of a house that goes up at an angle is also an inclined plane.

Helping a boy in a wheelchair to get up a step — LB p. 52

When people design buildings with steps, they also have to think about old people or people in wheelchairs. These people will struggle to get up steps, like the boy in the wheelchair in Figure 5.

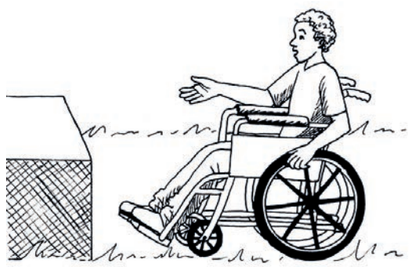

Figure 5

To help the boy, you can build a ramp to make a smooth path between the low place on the ground and the higher place. Two different designs of a ramp are shown below.

A ramp is also an **inclined plane**.

ramp A



Figure 6

ramp B

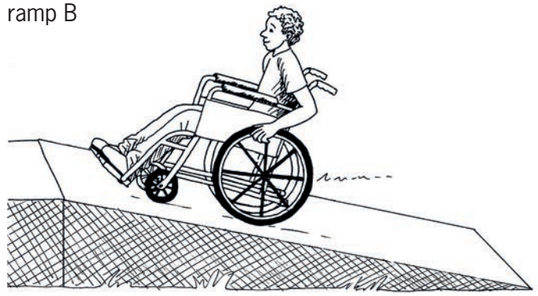

Figure 7

1. Which design will be the easiest for the boy to get from the ground to the higher place, and why? Hint: Read the part on "Words to talk about hills and roads going upwards" at the bottom of page 57.

   Ramp B, because the slope is not as steep.

2. Will the boy travel the same distance up both ramps A and B, or will he travel a longer distance on one of the ramps? If yes, which one?

   Ramp B. It is longer because the angle is not as steep.

3. Will the force with which the boy has to turn the wheels be the same on both ramps, or will it be greater on one of the ramps? If yes, which one?

   The force is different on the ramps. It is much greater on ramp A since it is steeper.

4. Use the following words to write a few sentences to explain why it is easier for the boy to go up the one ramp than the other:
   input force, output force, input distance, and output distance.

   The distance that the boy travels up ramp A at a slope is shorter than the distance that he travels up ramp B. These are the input distances. The input force is the force of the boy's hands on the wheels. Because ramp A has a bigger input distance, it requires a smaller input force. The output distance is the height of the step. The output force is the force in the vertical direction, directly upwards. For both ramps A and B, the output distances and the output forces respectively are the same.

5. Which ramp gives the boy the greatest mechanical advantage?

   Ramp B gives the boy the greater mechanical advantage.

Wedges

LB page 53

Axes and knives are wedges. Wedges change a small input force into a larger output force. They use a large input distance to give a small output distance.

Why does an axe make it easier to split wood? LB p. 53

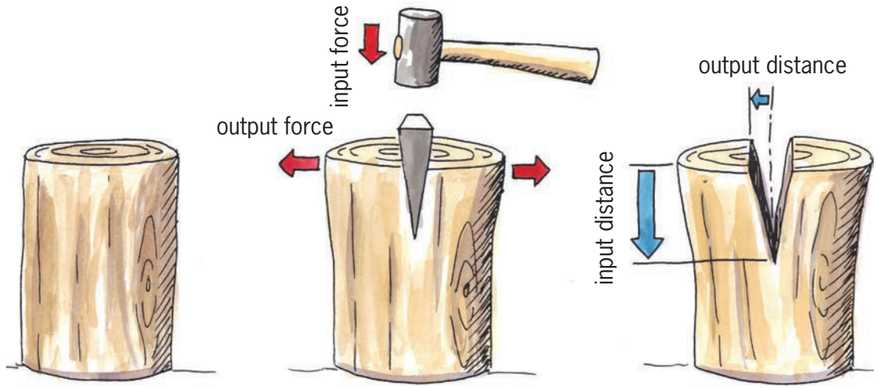

Figure 8: The wedge shape of the head of an axe makes it easier to cut wood.

When you cut wood with a wedge-shaped axe, a large input distance downwards causes a small output distance sideways.

1. Is the input force greater or smaller than the output force? Or are they the same?

   The input force is the same as the output force.

2. Does an axe give a mechanical advantage or a distance advantage?

   The axe gives a mechanical advantage.

The drawing on the right shows how wedges can be used to make a house **level**. If a house is not level, and you put a ball on the floor, the ball will roll to the lowest side or corner of the house.

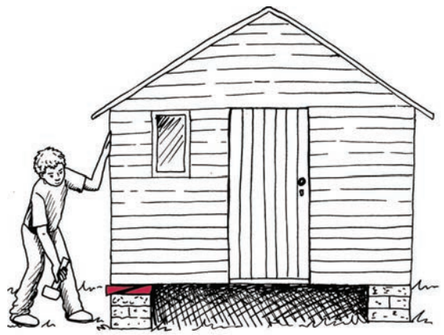

Figure 9: Wedges can be used to lift up very heavy objects, even houses!

5.2 Wheels

LB page 54

What is special about wheels? They can roll over a surface to cover a distance, just like a ball. When a wheel on the ground turns, it moves forward in a specific direction. So a wheel changes a turning or **rotational movement** into a straight or **linear movement**.

Without wheels, the only way to move objects over the ground or another surface would be to drag them across the surface. Perhaps you have moved a heavy cupboard or even a fridge or a stove over a floor. It is hard work! But if there were wheels underneath the heavy object, it would be much easier to move it, because the **friction** would be less.

The words "roll" and "rotate" both come from the same old Latin word "rota". **Rotational movement** means a rolling or circular movement.
The word "linear" comes from the word "line". **Linear movement** means movement in a straight line.

Friction is the resistance force that makes it hard to slide something along a surface.

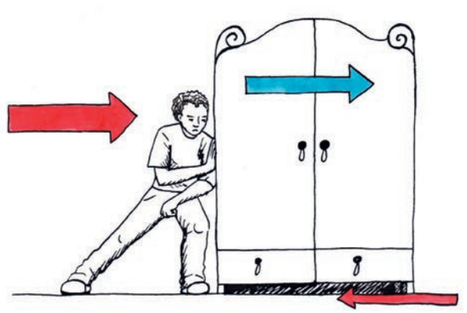

Figure 10

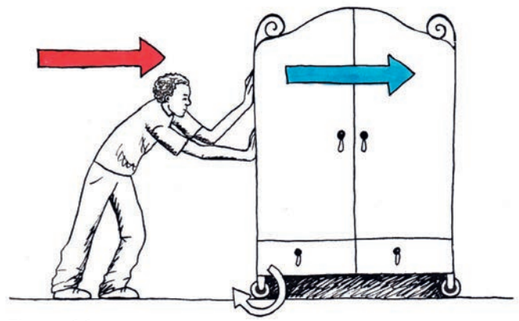

Figure 11

Imagine you are moving a heavy cupboard. Fortunately, the cupboard stands on wheels, like a shopping trolley. When you push the cupboard, the wheels turn and the cupboard moves forward. So your linear pushing movement is changed into the rotational movement of the wheels, which is changed into the linear movement of the cupboard. This is why you say that a wheel is a mechanism that changes the direction of movement. It changes the movement from linear movement, to rotational movement, and back into linear movement.

The wheels under the cupboard were freely turning, like the front wheel of a bicycle. You call that a **free-running wheel**.

The back wheel of a bicycle does not turn freely. It turns because the chain is pulling the gear on the back wheel to turn. You call that a **driven wheel**.



Figure 12: The back wheel of a bicycle is driven by the gear and chain mechanism

A wheel that is driven gives a distance advantage. The drawings on the right and below use a bicycle as an example to explain this.

The chain goes around a gear on the back wheel. That gear has a circumference of 30 cm. So if the chain pulls forward by 30 cm, then the gear will rotate once.

- When the gear rotates once, the wheel rotates once.
- The wheel has a circumference of 207 cm. If the wheel rotates once, the bicycles moves forward by 207 cm.
- Therefore, when you pull the chain forward by 30 cm, the bicycle moves forward by 207 cm. That is why a driven wheel gives a distance advantage.

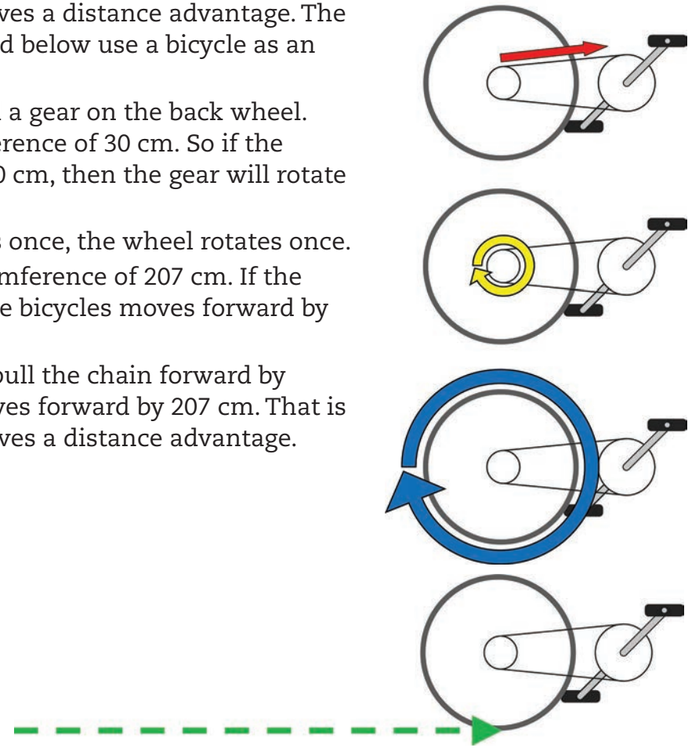

Figure 13: A wheel gives a distance advantage

For a wheel to turn, it has to turn around something that is at the centre of it. This is called the **axle**. An axle is for a wheel what a pivot or fulcrum is for a lever.

The inside of the wheel rubs on the axle, so there is some friction that tries to stop the wheel from turning. This friction is very small because:

- The distance moved at the outside of the wheel is greater than the distance moved at the axle. You can see this on Figure 14, where the distance moved at the outside of the wheel is shown in blue, and the distance moved at the axle is shown in red. For the same forwards movement, a bigger wheel will give a smaller movement at the axle. Therefore big wheels give less rubbing or friction at the axle.
- Most wheels have a very smooth oiled surface or bearings between the axle and the wheel, to reduce the friction even more.

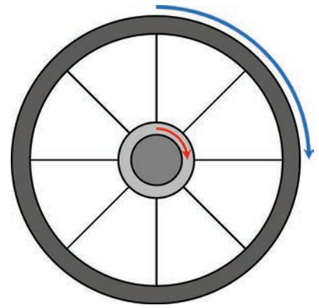

Figure 14

Group discussion LB p. 56

Work in groups of three or four. Write down your answers.

1. Why are some wheels small and others big?
   Hint: Think of the advantages and disadvantages of small wheels and of big wheels. Also think of the weight and cost of the wheels.

   Examples of answers:

   Bigger wheels can give a mechanical advantage, but they are heavier to drive and more expensive to make.

   Smaller wheels work better on smaller vehicles, but will generate more friction.

2. A motor car, a 4 × 4 bakkie, a shopping trolley, and a skateboard each have four wheels. For each one of these examples, which wheels are driven and which are free-running?

   The motor car and bakkie have driven wheels, the skateboard and shopping trolley have free-running wheels.

5.3 Gears

LB page 57

Things can turn in two directions LB p. 57

The diagram below shows two levers that are mounted on vertical supports. The levers can turn around axles that are shown with round black dots.

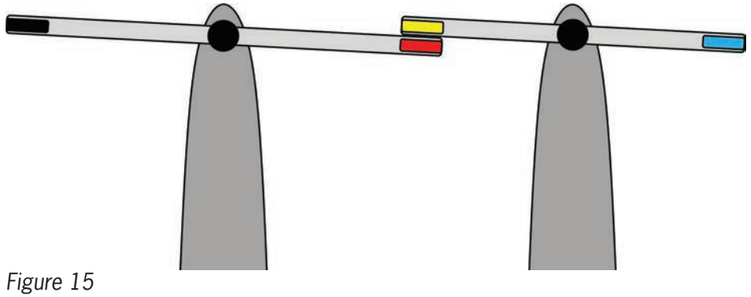

Figure 15

1. If you push the black end of the lever on the left down,
   (a) in what direction will the red end of the lever move, and

   The red end of the lever moves up.

   (b) in what direction will the blue end of the lever on the right move?

   The blue end of the lever moves down.

2. If you push the black end of the lever on the left down, will the lever turn **clockwise** like this, 

   or **anti-clockwise** like this? 

   Anti-clockwise

3. If you turn the lever on the left anti-clockwise, in which direction will the lever on the right turn?

   Clockwise

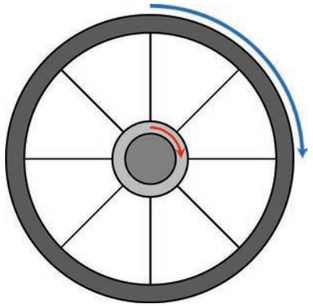

Figure 16: To talk about the direction that something moves over a distance, you use the words forwards, backwards, left, right, up and down. But what if something does not move to anywhere else, but turns while it stays in the same position? Then you talk about something turning, like the hands or arrows of a clock.

LB page 58

Gears are very similar to levers. Look at the drawings below.

Imagine you attach many levers to a round disc as in drawing A. If you then add material to make the ends of the levers into the shapes of gear teeth, you will have a gear, as shown by drawing B.

The type of gear shown in drawing C is called a **spur gear**. In Term 3 of this year and in Grade 9, you will learn about other types of gears.

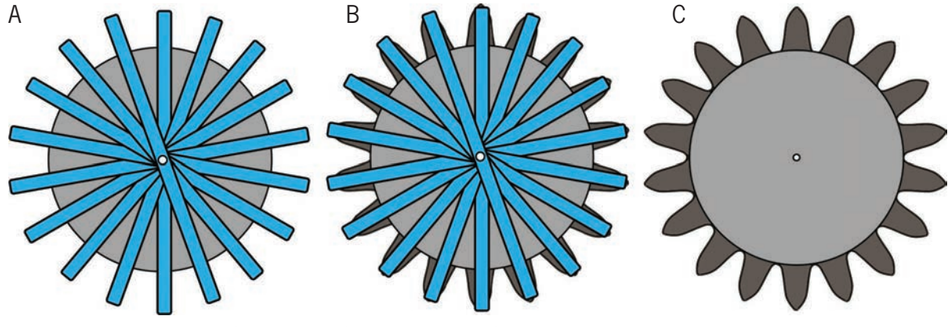

Figure 17: You can think of a gear as if it is made up of many levers.

4. The red gear below is turned anti-clockwise, until the tooth with the black dot reaches the arrow. Copy the figure below.
   (a) Draw another arrow to show where the tooth with the blue dot will be when the black dot reaches the arrow. See arrow on yellow gear
   (b) Draw a small cross to show where the red dot will be when the black dot reaches the arrow. See star on yellow gear

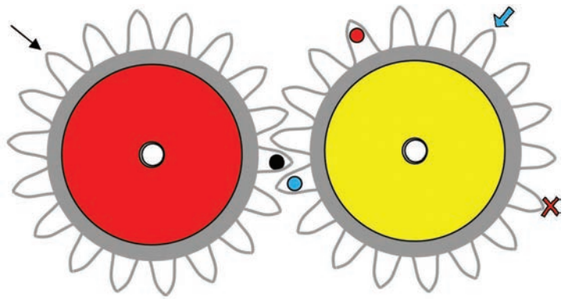

Figure 18

   (c) In what direction will the yellow gear turn, when the red gear is turned anti-clockwise?

   Clockwise

LB page 59

5. (a) In what direction must the small gear on the right be turned so that the blue dot will move downwards when you start to turn?

Anti -clockwise (Red dot upwards)

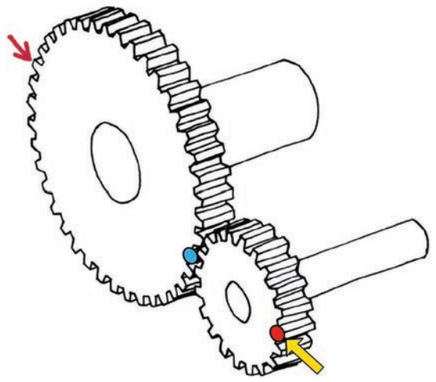

Figure 19

(b) If the small gear is turned clockwise until the red dot is back at the yellow arrow again, where will the blue dot on the big gear be?

(c) If you turn the small gear by hand, will the big gear turn faster or slower than the small gear? Explain your answer.

(c) If you turn the small gear by hand, will the big gear turn faster or slower than the small gear? Explain your answer.

Slower, because it has more teeth than the smaller gear, with a ratio of 2:1

Spur gears work together in sets of two or more. Any set of gears has an **input gear** and an **output gear**.

The input gear is also called the **driver gear**, and the output gear is called the **driven gear**.

If the small gear in Figure 19 is turned by hand then the small gear is the input gear.

When the teeth of two gears touch so that the gears turn together, you say that the two gears **mesh**.

Any two gears that mesh turn in opposite directions. This is called **counter-rotation**.

6. If you want the driver gear and the driven gear to turn in the same direction the two gears will not work. Can you make another plan?

You can make another plan by putting a gear in-between the driver gear and the driven gear. Allow learners to be creative and to come up with other solutions.

Idler gears LB p. 60

The drawing below shows a set of three gears. The gear in the middle is called an **idler gear**. Its purpose is to make the driven gear turn in the same direction than the driver gear.

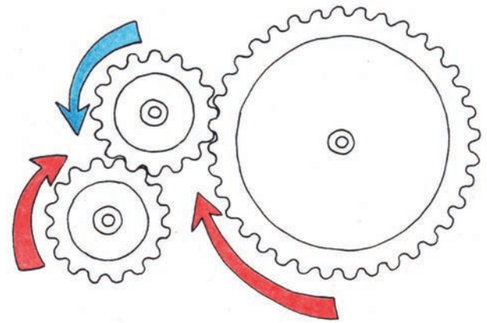

Figure 20: In a three gear set the input and output gears turn in the same direction.

1. Look at the system of gears in Figure 21. If the gear on the left is the driver gear, will the driven gear turn faster or slower than the driver, or will it turn at the same speed?

The driven gear will turn at the same speed as the driver gear, since it has the same number of teeth

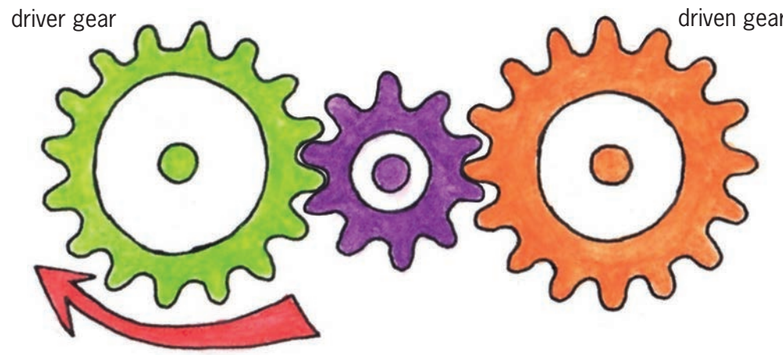

Figure 21

When an idler gear is smaller than the other gears, as for example in Figure 21, then it is made of harder material than the other gears. This is because the idler gear will rotate more times than the other gears. Every time a gear turns, the metal rubs against the metal of the other gears, and a little bit of the metal rubs away. Have a look at the soles of your shoes. The same thing happens to them.

Gear ratios LB p. 61

1. Look at the gears on the right. The big gear is the input gear, and the small gear is the output gear.
   Each gear is fixed to an axle, and the axle drives a fan. The speed with which the fan turns is called the **rotational speed** of the axle.
   (a) Will the fan on the big gear rotate faster or slower than the fan on the small gear, or will it rotate equally fast?

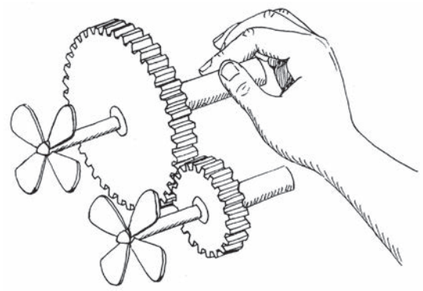

Figure 22

The fan on the big gear will rotate slower than the fan on the small gear.

   (b) Will the force with which you turn the axle of the big input gear be smaller or bigger than the turning force on the axle of the small output gear?

A little bit of turning of the input axle causes a lot of turning on the output axle. Therefore, the turning force on the input axle is bigger than the turning force on the output axle.

A gear system can change a fast rotational speed into a slower one, or a slow rotational speed into a faster one. The gear ratio is equal to the speed of rotation of the input gear divided by the speed of rotation of the output gear.

Gear ratio and speed ratio are the same thing. It can also be called "velocity ratio".

The speed of rotation of each gear is **inversely proportional** to the number of teeth of the gear. Therefore, the gear ratio can be calculated by dividing the number of teeth on the output gear by the number of teeth on the input gear.

In Figure 22, the big input gear has 40 teeth and the output gear has 20 teeth. So this gear system has a **gear ratio** of 20 ÷ 40 = ½. You can also write it as the ratio 1:2. It means that the input gear turns at half the speed of the output gear.

A gear system also changes the **turning force** on the input axle into a different turning force on the output axle. If the rotational speed of the output axle is faster, the turning force on the output axle will be smaller.

Turning force is also called **torque**.

For the gear system in Figure 22, the output axle exerts half the turning force of the input axle.

$$\text{gear ratio} = \frac{\text{rotational speed of input axle}}{\text{rotational speed of output axle}}$$

$$= \frac{\text{turning force on output axle}}{\text{turning force on input axle}}$$

$$= \frac{\text{number of teeth on output gear}}{\text{number of teeth on input gear}}$$

LB page 62

Sometimes gears do not touch each other, but are rather connected by a chain, as on a bicycle. But the gear ratios still work in the same way.

On the left in Figure 23 are all the different gear choices at the front of a bicycle, between the pedals. On the right of Figure 23 are all the different gear choices at the back of this bicycle, on the back wheel. The number of teeth of each gear is written inside the gear.

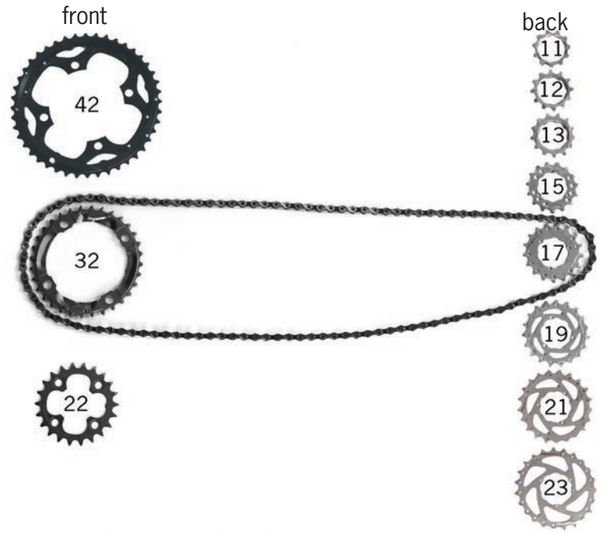

Figure 23: Gear choices on a bicycle

2. (a) What is the biggest gear ratio that you can choose on this bicycle? Choose the front and the back gears that you will use, and then calculate the gear ratio.

The 22-tooth front gear and the 23-tooth back gear. Gear ratio=23÷22=1.05

   (b) What combination of the front gear and the back gear will you choose to a go up a very steep hill?

The 22-tooth front gear and the 23-tooth back gear.

Chapter 6
Mechanisms that change the type of movement

LB page 63

In the previous chapter, you learnt how mechanisms such as wedges, inclined planes, wheels and gears can change the direction, the distance and the force of a movement. For wedges and inclined plains, the movement was in straight lines. For wheels and gears, the movement was in circles, in other words, **rotational movement**.

In this chapter, you will learn about another type of movement, that is in a straight line, but does not keep moving forward on that line. Instead, the movement is backwards and forwards or up and down along the line. When you cut bread with a knife, or you cut wood with a saw, you make such a movement. This type of movement is called **reciprocating movement.**

The word "reciprocate" comes from the old Latin words "re" and "pro". "Re" means back and "pro" means forward.

You will learn about mechanisms that change rotational movement into reciprocating movement, or reciprocating movement into rotational movement.

6.1 The crank-and-slider mechanism 79
6.2 The cam-and-follower mechanism 83
6.3 A car engine: Using a crankshaft and a camshaft 87

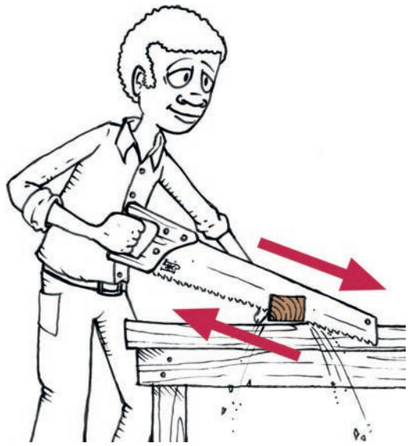

Figure 1: When you saw wood you make a reciprocating movement.

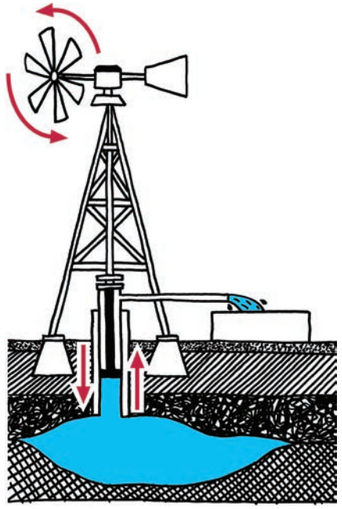

Figure 2: A wind pump converts a rotating movement into a reciprocating movement.

Materials required for this chapter:
pen, pencil, sharpener, eraser, 30 cm ruler

6.1 The crank-and-slider mechanism

Learners *observe* the movement of a crank-and-slider mechanism, in a series of drawings that are in chronological order. They *measure* things on the drawings, and *interpret* the relationships between different measurements.

They then observe drawings of how a steam engine uses a crank-and-slider mechanism.

6.2 The crank-and-follower mechanism

Learners *read and look at drawings* about the names for different shapes of cams, and the different parts of a cam-and-follower mechanism.

They then *observe* the movement of an engine valve pushed by a cam-and-follower mechanism, in a series of drawings that are in chronological order. They *measure* things on the drawings, and *interpret* the measurements.

Lastly, they *investigate* the movement of a snail cam. They *discover* that at a certain position of a snail cam's rotation, the distance from the axle to the outer edge of the cam suddenly drops from a big to small value.

6.3 A car engine: Using a crankshaft and a camshaft

Learners *read* and *look* at *drawings* about how a motor car engine works, and especially about how cam-and-follower mechanisms are used to open and close valves at the correct times.

Then they make a 3D artistic drawing of the crankshaft of an engine.

LB pages 64–65



Figure 3: A steam driven locomotive uses a crank-and-slider mechanism to turn the wheels.

6.1 The crank-and-slider mechanism

LB page 66

Revision: A crank-and-spool mechanism

You learnt about cranks in Term 3 of Grade 7. There, a crank was used to turn a wheel called a spool on which rope was rolled up. The crank was part of a bigger mechanism that is called a crank-and-spool mechanism or a winch. The crank can be turned one way to pull in the rope, and the other way to let it out.

When a crank is part of a winch, it changes a big rotational movement with a small force into a small rotational movement with a big force. The longer the crank arm is, the more mechanical advantage it gives.

Some winches also use gears to give an even bigger mechanical advantage.

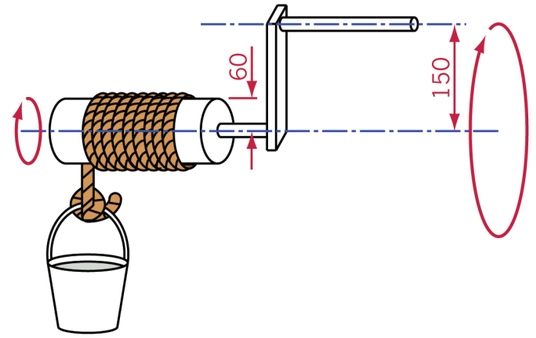

Figure 4: A simple hand-powered winch used to lift a bucket of water

Changing rotational movement into reciprocal movement

To change rotational movement into reciprocal movement, a crank is used in a different way, as shown by the pictures on the next page. A **slider** is attached to the crank by a **connecting rod**. The slider is normally round, and fits into a round hole. It can only move sideways, not up or down.

There is a **pivot** between the crank and the connecting rod, and another **pivot** between the connecting rod and the slider. Both pivots change position when the mechanism is working. The crank turns around an **axle**. The axle never changes position, it just turns.

The crank can be fixed to a **wheel** to make the wheel turn with it. Or the crank can be part of the wheel.

The way the crank works depends only on the distance between the centre of the axle and the centre of the pivot between the crank and the push rod. This distance is called the **crank throw**. This is shown on Figure 5.

The longer the crank throw is, the greater the mechanical advantage of the crank will be. The shape of the crank does not matter.

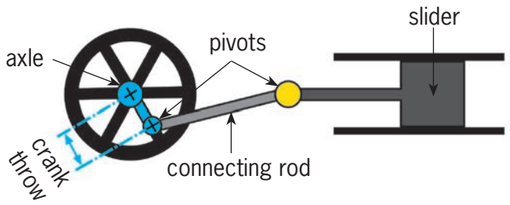

Figure 5: The different parts of a crank-and-slider mechanism

Thinking about the pictures LB p. 67

The different steps in the operation of a crank-and-slider mechanism are shown in the pictures on the right, in Figure 6.

1. How long is the crank throw in the mechanism in Figure 6?

   Between 5 and 5.5 mm

2. How far is the movement of the slider from the furthest position on the left to the furthest position on the right? This can be called the "total sideways movement".

   10 mm

3. If the crank throw was twice as long, how long would the total sideways movement of the slider be?

   20 mm

4. Will the slider ever stand still while the crank is rotating?

   No, never

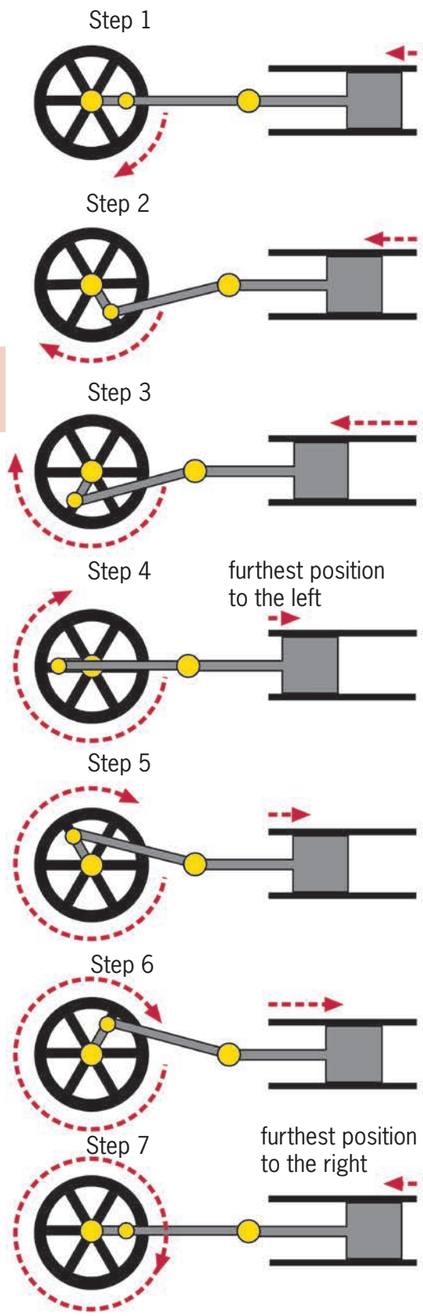

Figure 6: Different steps during the operation of a crank-and-slider mechanism

The crank-and-slider mechanism inside a steam engine

In a steam locomotive a coal fire is used to boil water. The water changes into very hot steam that has a **high pressure**. Imagine you are blowing up a balloon. You have to create a high pressure of air in your mouth to make the balloon bigger. The balloon becomes bigger because the high pressure air moves the sides of the balloon outwards. Steam at a high pressure can also move things.



Figure 7

The pictures on the right show how the movement created by high pressure steam is changed into the rotation of a wheel.

The hot high pressure steam is shown in red. When the steam expands, it also cools down. The cooler steam is shown in purple, and at the end it is shown in blue.

In an engine, the slider is called a **piston**, and the hole inside which the piston moves is called the **cylinder**.

A steam engine uses **valves** to let in the hot steam on the right or the left of the cylinder. The valves have to open and close at the right times. Is there some mechanism that can do this? This is what you will learn about in the next lesson.

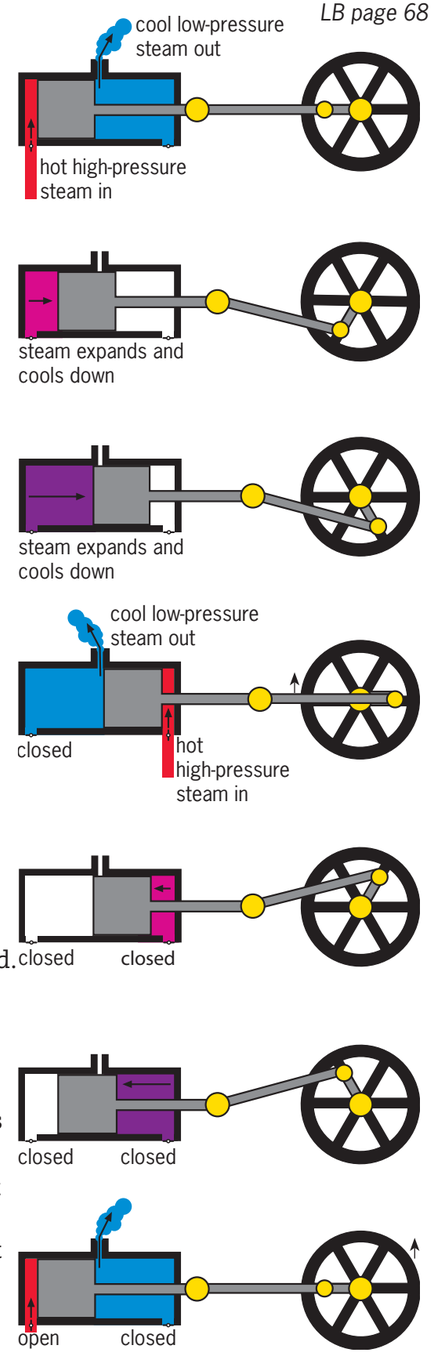

Figure 8: How a steam engine works

Look again at Figures 6 and 8.

LB page 69

A crank-and-slider mechanism can be used to change rotational movement into reciprocal movement, or it can be used to change reciprocal movement into rotational movement. In other words, if you move the crank, then the slider will also move, and if you move the slider, the crank will also move.

6.2 The cam-and-follower mechanism

A **cam** is a wheel that is not round, or it is a round wheel that turns around an axle that is not at the centre of the wheel.

A cam is used with a **follower**. The rotational movement of the cam is changed into the reciprocating movement of the follower. The follower is in a **sleeve**, so that it can move in one direction only.

A cam is **driven** by an **axle**, so that when the axle rotates, the cam rotates. When the cam rotates, the follower slides on the cam. The position of the follower depends on the angle at which the cam is rotated.

A cam and follower changes the rotating movement of the cam into the reciprocating movement of the follower.

Do you remember the difference between a driven wheel and a free-turning wheel about which you learnt in the previous chapter?

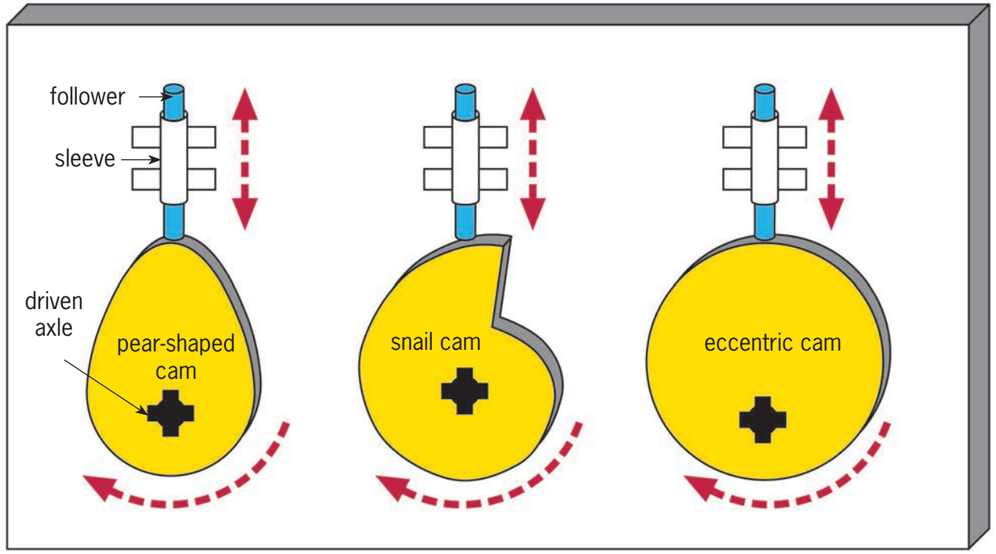

Figure 9: The different parts of a crank-and-slider mechanism, and different shapes of cams

Investigate how a cam can be used to open and close valves LB p. 70

Figure 10 shows how the rotation of a cam changes the position of a valve in an engine. The figure continues on the next page. Study this figure carefully before you answer the following questions.

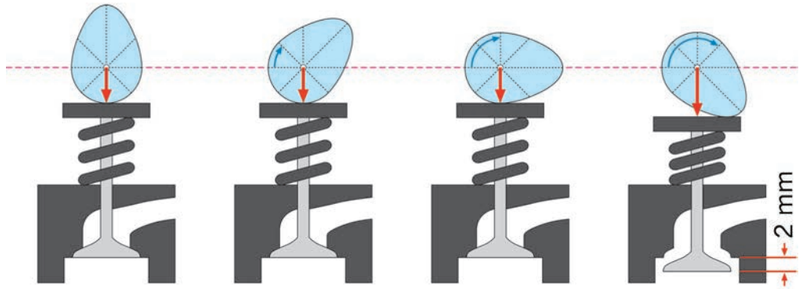

Figure 10: The movement of a valve as a cam rotates

rotation of cam	starting position	1 eight of a cam rotation	2 eights of a cam rotation	3 eights of a cam rotation
rotation of cam in degrees	0°	45°	90°	135°
distance that valve is open	0	0	0	2 mm

1. Copy and complete the table above to show how far the valve is open at different positions of the cam in Figure 10. Measure the distance that the valve is open.
2. Which of the pictures above show the valve at its highest position?

   All the positions, except the positions from 3 eights of a rotation to 5 eights of a rotation

3. Which picture shows the valve at its lowest position?

   4 eights of a rotation

Figure 10 above shows different positions of a cam and a valve as the cam is rotating. This is the way that the valves in most engines are opened and closed at the correct times.

A cam can convert rotational to reciprocal movement, but not the other way round

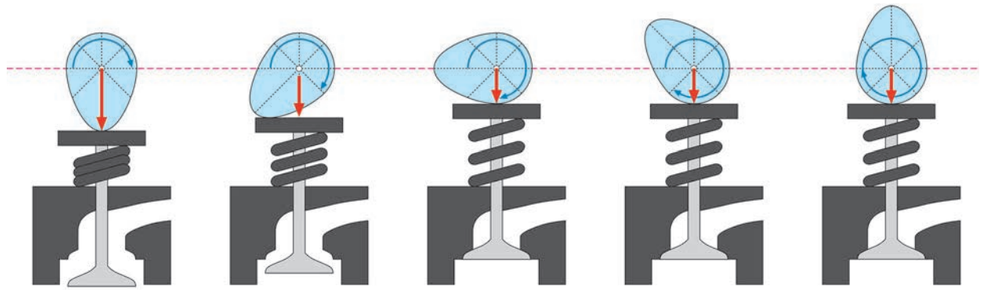

4 eights of a cam rotation	5 eights of a cam rotation	6 eights of a cam rotation	7 eights of a cam rotation	one full cam rotation
180°	225°	270°	315°	360°
4 mm	2 mm	0	0	0

The reciprocating movement created by a snail cam LB p. 71

1. The drawing on the right uses red arrows to show the distance between the centre and the edge of a snail cam at different angles of rotation. Each arrow is rotated with 45° clockwise from the previous arrow.
   Copy the table below and measure the different arrows, from the shortest to the longest, and fill in your measurements.

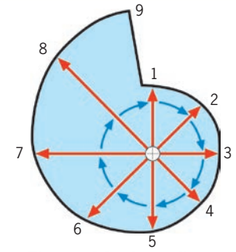

Figure 11: A snail cam

position	1	2	3	4	5	6	7	8	9
length	11 mm	11 mm	11 mm	11 mm	12 mm	16 mm	20 mm	25 mm	24 mm

2. Is there a pattern in the lengths of the arrows? How does the pattern work?

   The arrows have the same length from positions 1 to 4. From position 5 to 9, the arrow length increases all the time.

3. What happens between position 9 and position 1?

   The distance from the axle to the outside edge of the cam (the arrow length) suddenly drops/decreases by 13mm.

Something to read at home: Another type of cam

Some cams are a round wheel, but they do not rotate around the centre of the wheel. These cams are called **eccentric cams**. They are used on many modern bicycles.

During a bicycle race, the cyclists sometimes get flat or punctured tyres. They then have to take the wheel off to remove the tyre before they can fix the tyre. This takes a lot of time, and they'll struggle to catch up with the other cyclists again.

Many years ago, engineers designed a mechanism with which you can quickly take a wheel off a bicycle, without using any tools. This is called a "quick-release" mechanism.

Today, more expensive bicycles use quick-release mechanisms on their wheels. They also use a quick-release mechanism to make it quick and easy to change the height of the saddle. The photos below and on the right show how a quick-release mechanism uses an eccentric cam to lock the saddle at the correct height.



Figure 12: A quick-release mechanism is used to clamp the seat post to the frame of this bicycle.



Figure 13: The sides of the quick-release mechanism move or clamp closer together as the eccentric cam is turned by the handle.

6.3 A car engine: Using a crankshaft and a camshaft

The different steps in the rotation of a four-stroke petrol engine

Figure 14 shows how a one-cylinder petrol engine works. In a car engine, the cams are parts of camshafts that turn as the engine turns. You do not need to understand everything about the engine in Figure 14, as long as you can see that it is important that the inlet and outlet valves open and close at the correct times

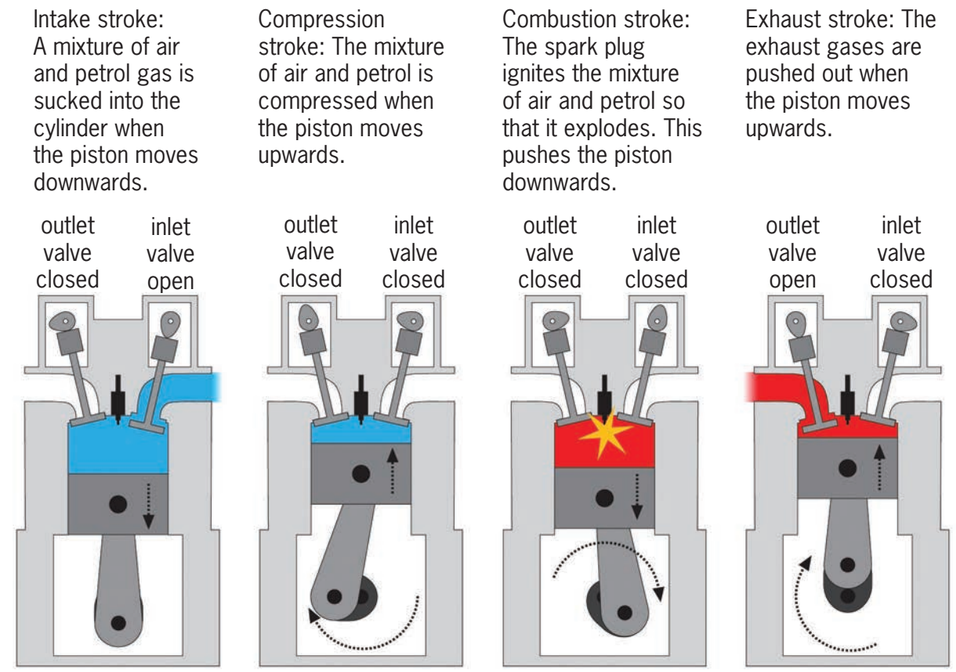

Figure 14

.

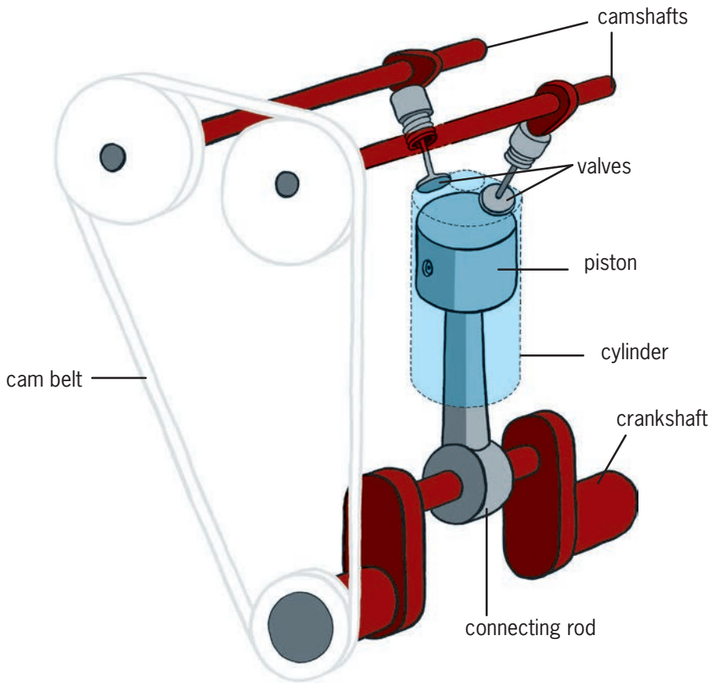

Figure 15: The moving parts inside one cylinder of an engine

Draw an engine crankshaft LB p. 74

1. Make a three-dimensional artistic drawing of the crankshaft of a one-cylinder engine. Use shading to make it more realistic. First make a rough drawing, before you make your final neat drawing.
   Hint: Look back at page 57 (Learner Book page 47) to see how you can use shading to make something look round.

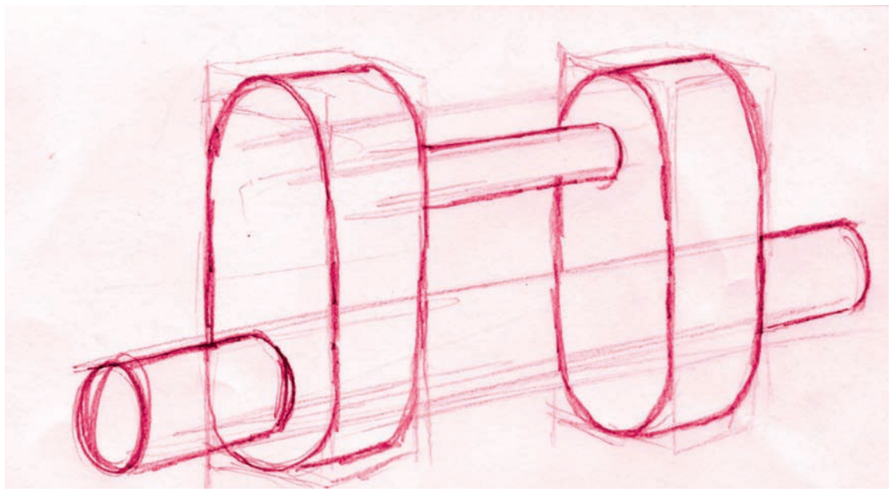

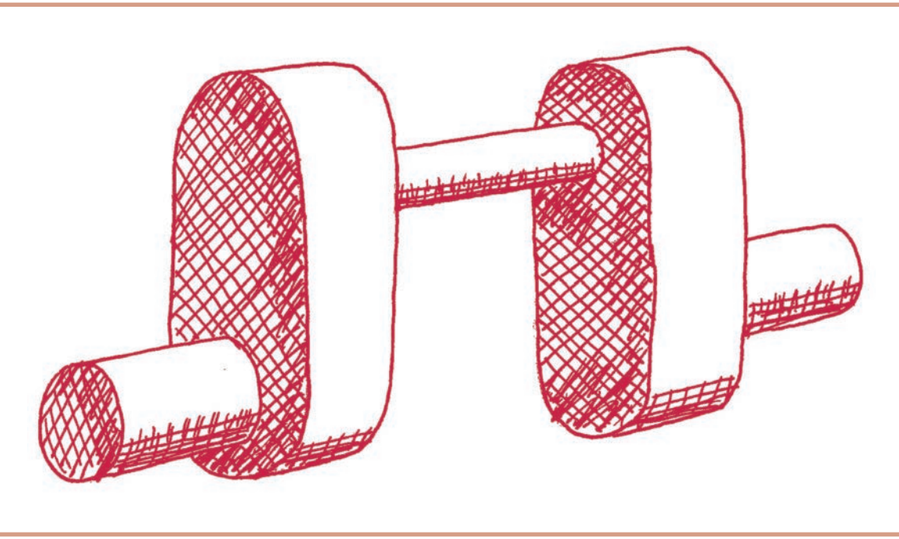

Next week

Next week you will start with a practical project to design and make a model of a machine that can crush grain to make flour. This machine will change rotational movement into reciprocating movement.

CHAPTER 7 MINI-PAT

Design and make a model of a machine to crush grain

LB page 75

Over the next four weeks, you will design and make a model of a machine that can crush grains like mielies or wheat to make meal or flour.

Week 1

Compare different designs and make your own design 93

Week 2

Draw your design and build the model 99

Week 3

Make improvements to the model and draw an artistic perspective drawing of it 106

Week 4

Present your model and drawings 109

Assessment

Investigate:

Evaluate different designs that other people made ..... [6]

Design brief, specifications and constraints ..... [6]

Design:

Design how to make the structure stronger ..... [8]

Decide what type of mechanism you will use ..... [4]

Make:

Build the basic structure and the mechanism in it ..... [12]

Draw your design of parts to add to the model ..... [12]

Make your improvements to the model ..... [10]

Draw an artistic sketch in perspective of your model ..... [12]

[Total: 70]

Materials required for this Mini-PAT:

ruler

geometry sets

big strong scissors (and pliers if the school has)

corrugated cardboard from old boxes (learners should bring this to school)

nail, 1 mm thick and 30-40 mm long

copper wire, 1 mm thick and 28 cm long (or galvanized steel wire if used with pliers)

prestik

masking tape

a sheet of A4 paper (can be written or printed on)

Week 1

Compare different designs and make your own design

Learners observe the different designs given. None of these designs are perfect, but they all show some good ideas. Learners then evaluate the different given designs in terms of its advantages and disadvantages.

Learners identify or *choose* the design brief, specifications and constraints. Then they make a design to solve a particular problem about the structure of the grain crusher. Finally, they *choose* what type of mechanism they will use, and *give a reason for their choice*.

Week 2

Draw your design and build the model

Learners build a model of a grain crusher according to given graphical instructions. They *interpret* photos of different steps in the construction process in order to build their own model. The model for which the instructions are given has a few problems. Its structure is not stable, and its mechanism will not make the pestle go up and down. In the rest of the mini-PAT learners *make their own designs* and decide how to solve these problems, and then modify their models accordingly.

Learners make 2D and 3D working drawings of parts that they will add to the structure to make it stable.

Week 3

Make improvements to the model and draw an artistic perspective drawing of it

Learners *make the modifications* to the model they planned before.

They draw a 3D artistic perspective drawing of their final model. But before they draw their final drawing, they have to make a **rough drawing**. It is very important to start with a rough drawing. If learners immediately start with the final drawings they will have to erase parts of their drawing many times, which will get messy, plus they may erase parts of their drawing that were actually good. It is good to plan before you make. In the same way, it is good to make a rough drawing that is a plan of your final drawing, before you make the final drawing itself.

Week 4

Present your model and drawings (60 minutes)

The different teams prepare to have a stall at an "expo" where all the teams exhibit their projects. When the "expo" takes place, learners investigate the designs of other teams, and they explain their own designs to other teams.

LB pages 76–77



Figure 1: How do mielies become maize meal?



Figure 2: Before machines were invented to grind or crush the mielie seeds, it took a lot of hard work to make maize meal.

Week 1

LB page 78

Compare different designs and make your own design

Evaluate different designs that other people made (30 minutes)

This is **individual work**.

The drawings below show rough designs for grain crushers that other people made. These designs are not complete, and there could be problems with them. But there could be useful ideas that you may get from these designs.

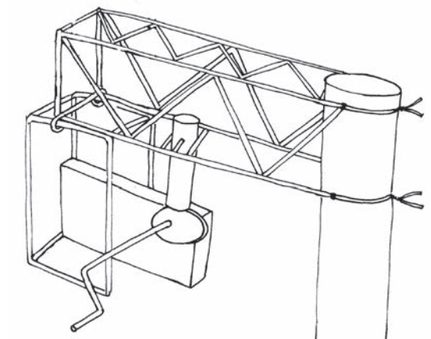

design A

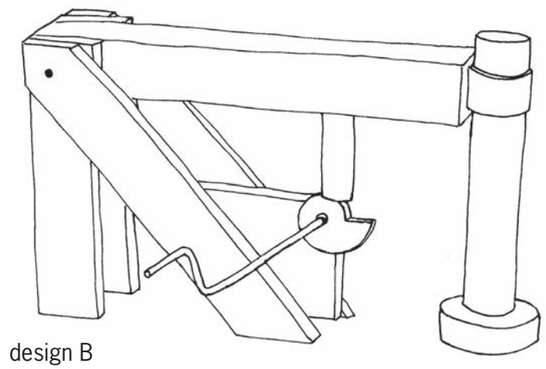

design B

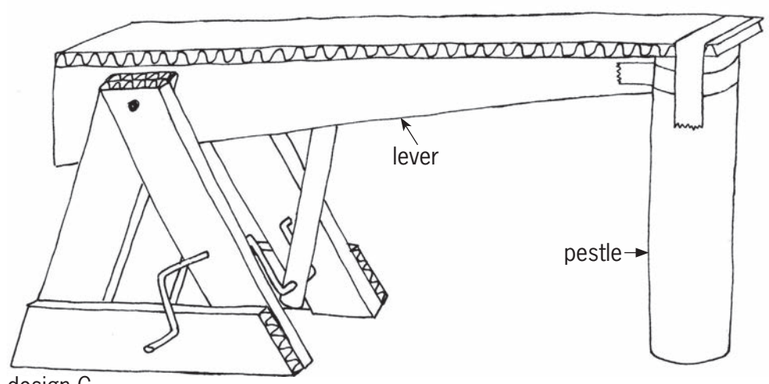

design C

Figure 3: Rough designs made by other people

Make a list of the advantages and disadvantages of the different designs. Think about the following:

- How strong and stable is the structure?
- What materials and tools do you need to make the structure?
- How easy will it be to make the structure?
- How hard and fast will the pestle hit the floor?
- What is the mechanical advantage of the lever?

You will be assessed on the last two rows of the table, on advantages and disadvantages.

	Design A	Design B	Design C
Strength and stability of structure	Horizontal beam strong due to triangulation. Rectangular base on bottom left weak from no triangulation.	Very weak: there is nothing preventing the legs of the structure from opening up.	Horizontal T-shape beam is strong. A-frame-legs are strong. But no stability sideways.
Materials and tools needed	wire, wood pliers, saw, drill	wood for structure; wire for crank and axle; tape to hold pestle saw, drill, pliers	cardboard for structure; paper dowel for pestle; wire for crank and axle; scissors, pliers, tape, glue
How easy to make?	Need pliers and skill to be able to make wire frame. Easy to cut wood. Difficult to cut shape of cam out of wood.	Easy to cut wood. Difficult to cut shape of cam out of wood.	Easy to cut cardboard. May be tricky to bend wire accurately to make crank and axle.
How hard and fast will the pestle hit the floor?	Not very hard or fast bump, pear-shaped cam will give a smooth up-and-down movement.	Pestle will hit ground hard and fast when the follower suddenly falls from the highest position on the snail cam to the lowest.	Not very hard and fast bump, as the crank-and-slider will give a smooth up-and-down movement.
Mechanical advantage of lever	The lever has a mechanical disadvantage: movement of the pestle is about twice the movement of the follower.	The lever has a mechanical disadvantage: movement of the pestle is about twice the movement of the follower.	Big mechanical disadvantage: movement of the pestle is about three times the movement of the slider.
Advantages	Strong horizontal beam. Wire will last long and not get damaged when wet.	Pestle hits the ground hard and fast.	Strong structure. Easy to cut from cardboard.
Disadvantages	Weak base of structure. Smooth movement of pestle. Cam difficult to cut from wood.	Very weak structure. Cam difficult to cut from wood.	Smooth movement of pestle.

[Total: 6]

Design brief, specifications and constraints (30 minutes)

Discuss this in **teams of three or four**. There should be at least one boy and one girl in each group. Everyone has to write their own answers below.

1. Write the **design brief**. A design brief tells you what the problem is and who will benefit from or use the solution. [1]

   A family or a community or a business wants to make meal or flour from mielies, wheat or another grain. They want a quick and easy way to make the meal or flour that does not require a lot of handwork.

   A machine to crush grain will usually be powered by an electrical motor that provides rotational movement. You will not use an electrical motor in your model, but will rather turn the handle of a crank by hand. This rotational movement should be changed into a reciprocating movement so that the grain will be crushed, like hitting it with a hammer.
   The mechanisms that your model uses should be housed inside a strong and stable structure.

2. Answer the following questions to identify the **specifications** for your design:
   (a) What different mechanisms could make the grain crusher work? [1]

   crank-and-slider mechanism, cam-and-follower mechanism

   (b) What forces should the structure be able to withstand? [1]

   weight of the pestle, shock when the pestle hits the floor, sideways forces

3. Identify the **constraints**:
   (a) How much time do I have to design and make the model? [1]

   3 weeks

   (b) What materials can I find easily to build the model? [1]

   cardboard, wire, nails (some learners may also be able to find wood and/or metal)

   (c) What tools do I already have with which I can make the model? [1]

   scissors (some learners may have pliers, saws and drills)

[Total: 6]

Design to make the structure stronger (45 minutes)

Work in your teams again, but make your own sketches and give your own answers.

You will later be given instructions on how to build a structure such as the one below. But there are problems with this structure. It is not stable enough to withstand forces from the side. It can collapse or topple over.

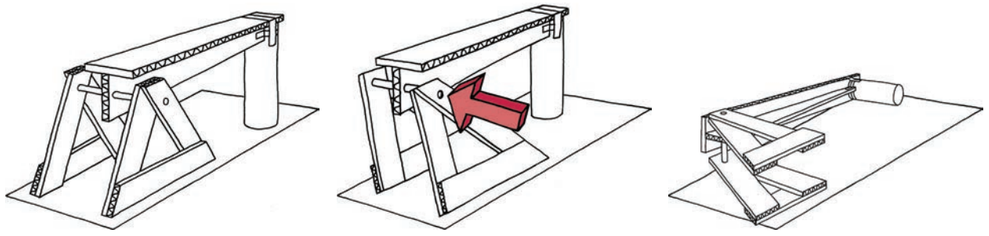

Figure 4: A structure for a grain crusher that is not strong or stable enough to withstand forces acting on its side.

Design something that you can add to the structure to prevent it from collapsing or toppling over sideways. Look at Chapter 1 to help you.

1. Make a rough sketch of your plan to strengthen the structure.
   Each person in your team should make their own sketch of their own idea.
   Add notes and labels to the sketch to explain your design. [4]

Two examples of possible designs are shown on this page, and another two on the following page. No rough sketches are shown here, but the learners should draw rough sketches first.

The arrows show the direction of corrugations.

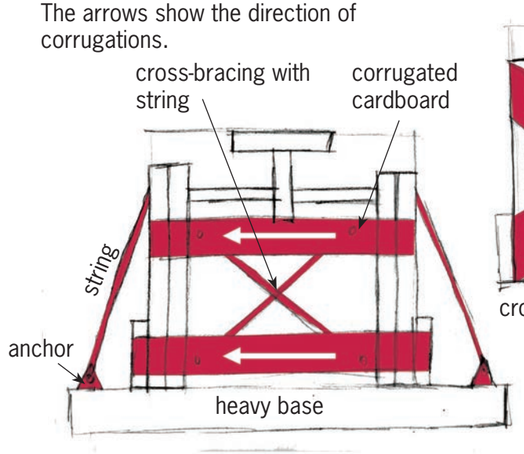

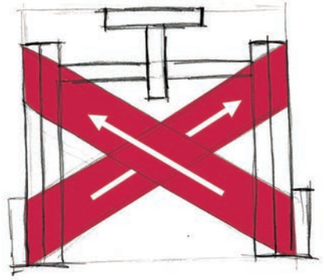

cross-bracing with corrugated cardboard

Marking guidelines:

Labels	[1]
Provision for stability	[1]
Clarity of explanation	[2]

2. Compare the rough designs of everyone in your team. Then decide together on what design you will use to strengthen the structure. Make a neat sketch of this design. Add notes and labels to the sketch to explain the design. [4]

Note: The learners do not have to make 3D sketches, but it is acceptable if they do so.

The sketches on this and the previous page are only examples of possible designs to solve the problem. Learners may make other good designs, to solve the problem, that are not shown here.

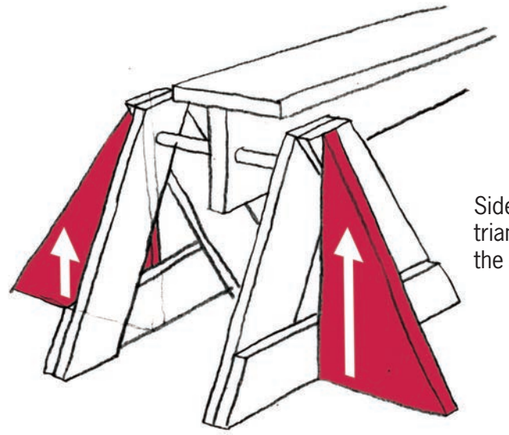

Sideways triangulation of the A-frames

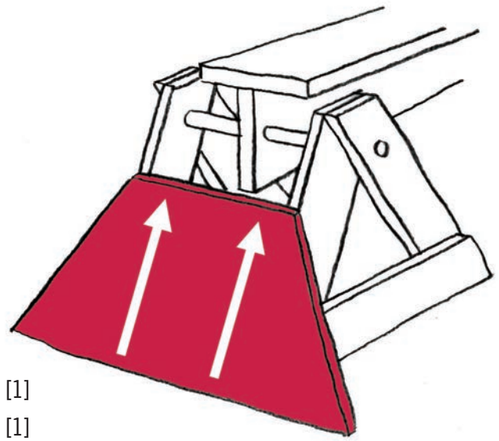

Marking guidelines:

Labels	[1]
Provision for stability	[1]
Clarity of explanation	[2]

[Total: 8]

Decide what type of mechanism you will use (15 minutes)

Look at the old method of crushing grain shown in the drawing on the right. The hollow vessel holds the grain seeds. The operator drops the heavy pole into the vessel with a strong and quick movement. This movement crushes the seeds into smaller pieces.

The mechanism that you choose should also give a strong and quick downwards movement of the pestle.

You can use a crank-and-slider mechanism or one of the shapes of cams below to change rotational movement into reciprocating movement. You learnt the names of these shapes of cams in Chapter 6.

You have to choose whether a crank-and-slider mechanism or a cam-and-follower mechanism will work best to crush the grain. If you choose a cam-and-follower mechanism, you also have to choose the shape of the cam.



Figure 5

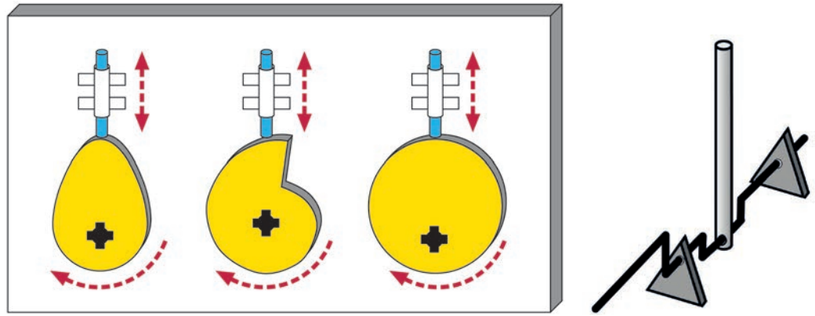

Figure 6: Different mechanisms that you can choose from to change rotational movement into reciprocating movement

1. What mechanism did you choose, and why?

   Snail cam: The follower will suddenly fall from the highest position on the snail cam to the lowest position. This will cause a quick and hard bump of the pestle on the floor.

[Total: 4]

Week 2

LB page 82

Draw your design and build the model

Build the basic structure and the mechanism in it (60 minutes)

First build the structure and mechanism according to the plans and instructions on the following pages. Add your own design for how to make the structure stronger later.

The photo below shows what the model will look like before you make your changes.

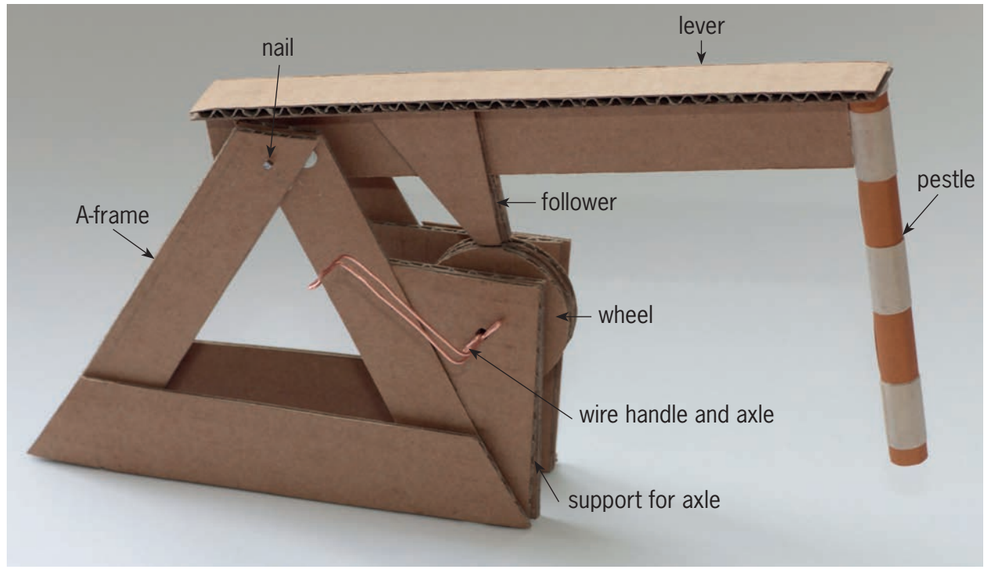

Figure 7

In the plans of the model, a wheel is used instead of a cam or a crank-and-slider mechanism. Therefore the model will not work. You will have to use a cam or a crank-and-slider mechanism to make it work.

On the following pages there are drawings of the different parts that you have to cut out of corrugated cardboard. Trace the shapes onto cardboard before you cut them out. Make sure the **corrugations** are in the correct direction, as shown by the arrows on the drawings.

Corrugations are like tunnels between the two outer layers of the cardboard. Corrugated cardboard is stronger in the one direction than in the other.

You have to decide for yourself how many of each part you need to make. You also have to decide where you will use spacers, and how many to use.

Each member of the team should build their own model.

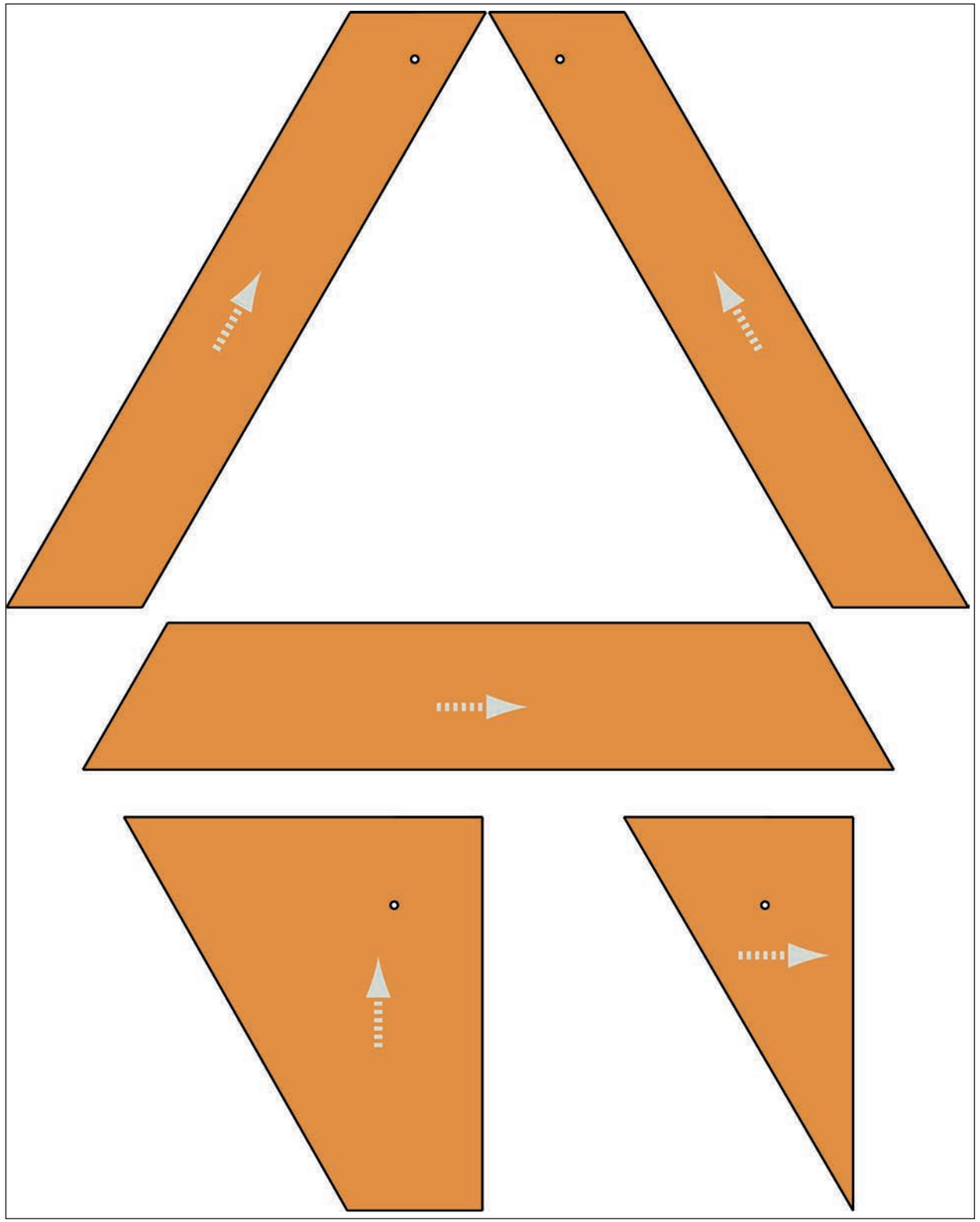

Figure 8: The parts of one of the two A-frames with its support for the axle.

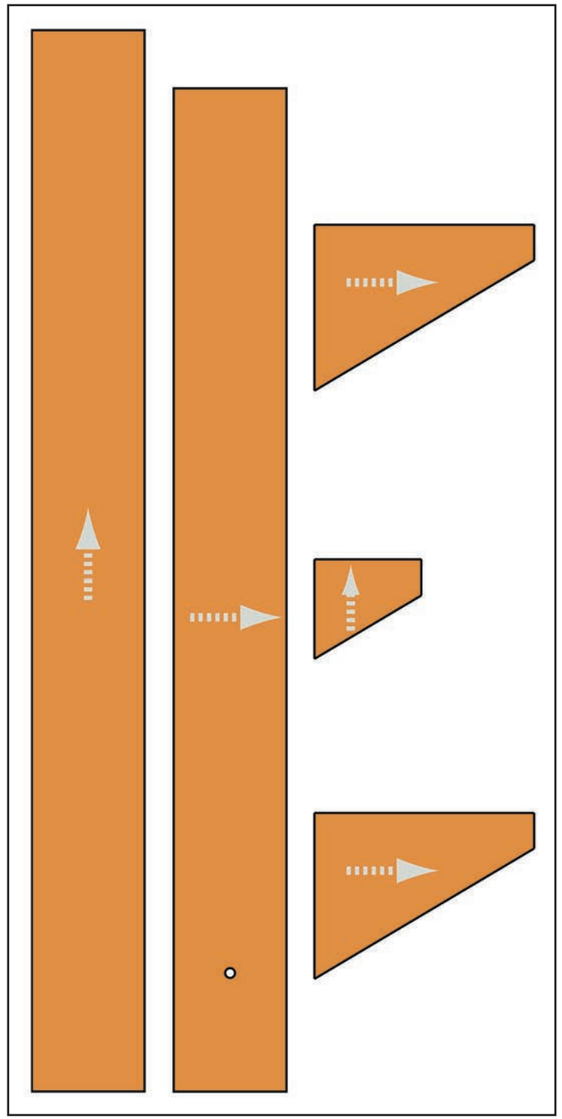

Figure 9: The parts of the lever, and the follower for the cam that will be attached to it

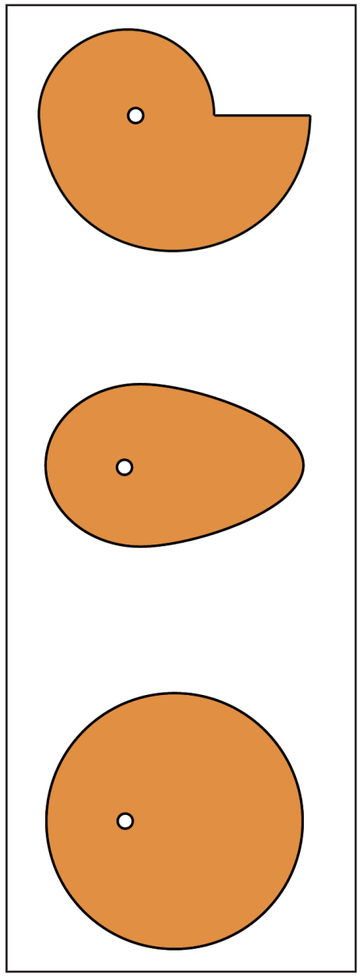

Figure 10: Three different shapes of cams to choose from

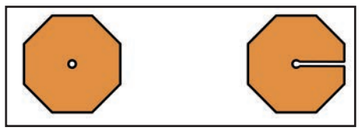

Figure 11: Spacers to use on axles

The steps for building the model are shown on the next two pages.

How to attach the parts of your model

Use Prestik to attach the pieces of cardboard, so that you can take them apart if you make a mistake or want to change something. After your project is completed, you may use glue or tape to make the model stronger.

Other materials that you will need

For the axle of the cam or crank mechanism, use 1 mm thick copper wire. This is easy to bend and you can cut it with scissors. If you do not have copper wire, you can use thin steel wire. But you will need a pair of pliers to bend and cut that.

Use a nail or a piece of wire for the axle on which the lever swivels.

Safety warning

Do not remove any copper wire from electrical wiring. If you do this, you can be shocked to death, and other people won't be able to use electricity before the wires are fixed. You can also go to jail for stealing electrical wire.

Unwanted sideways movement on an axle

The model shown in the photos below does not work well because the lever can move sideways on its axle. If this happens the follower could fall off the cam.

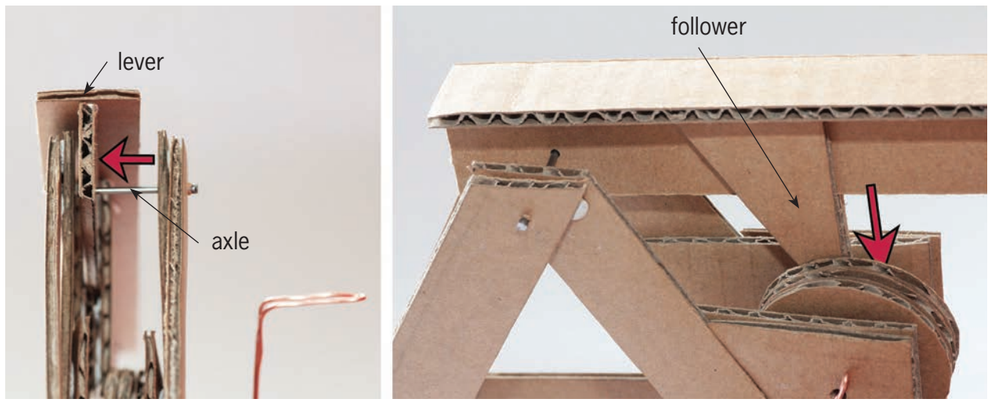

Figure 13

Mark allocation

Your teacher will look at the following to assess your model:

- You followed the plans and instructions successfully. [4]
- You made a mechanism to change the rotational movement of the handle into the reciprocating movement of the pestle. [3]
- The parts that turn on axles cannot move sideways. [2]
- Your model works well. [3]

[Total: 12]



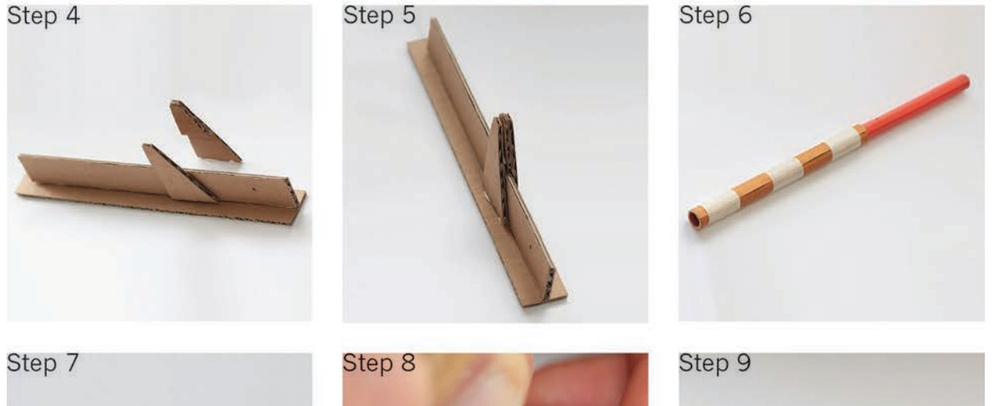

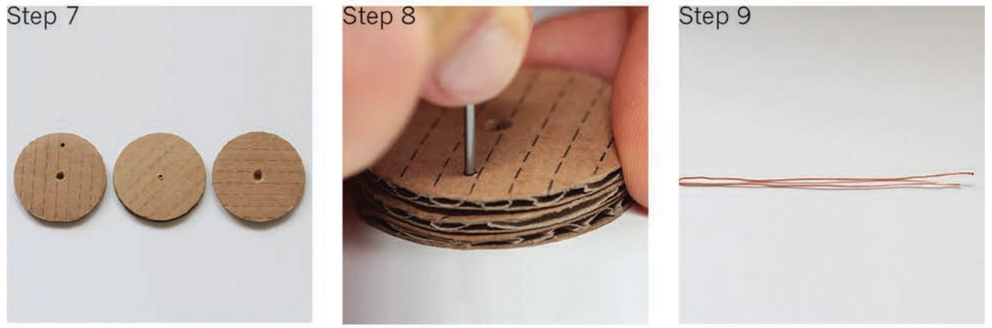

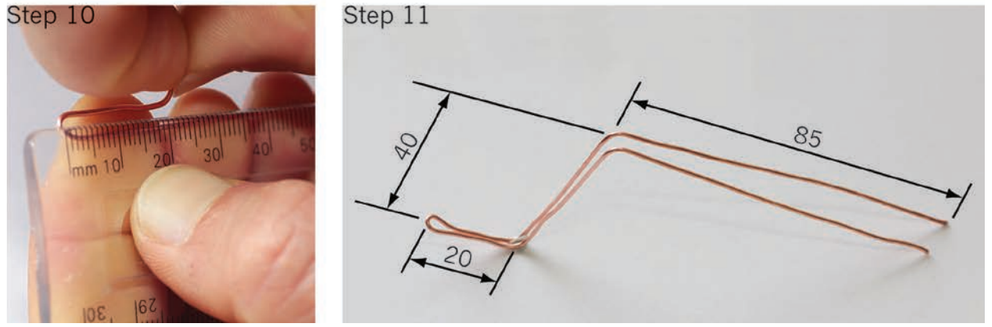

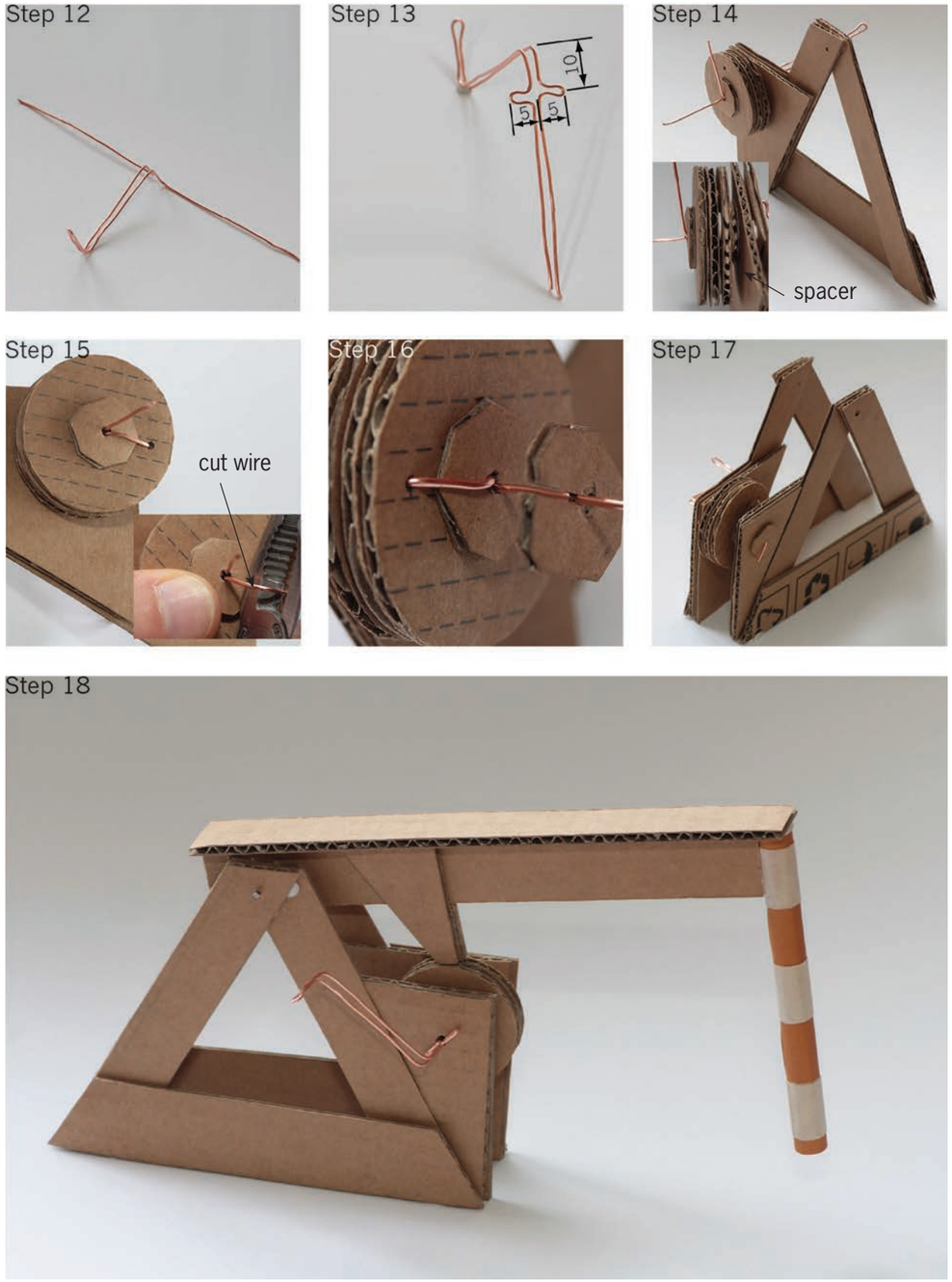

Figure 12: Different steps of building the model

Draw your design of parts to add to the model (60 minutes)

This is **individual work**.

Figure 4 on page 91 shows that the model you have made so far is not stable enough to withstand forces acting on its side. It can collapse or topple over. You want to design members to add to the structure so that this cannot happen.

Make: 2D working drawing

1. Make a working drawing in 2D of what you will add to the structure so that it cannot collapse or topple over.
   Decide for yourself what the scale should be so that the drawing will fit onto a sheet of paper.

Your teacher will look at the following to assess your drawing:

- The drawing accurately shows the design you that sketched on LB page 80. [2]
- The drawing shows all important dimensions. [2]
- The drawing is to scale, and the scale is shown. [1]
- The drawing shows all hidden lines. [1]

Make: Isometric projection drawing

2. Make a 3D isometric drawing of what you will add to the structure Use a ruler.
   You have to decide on the scale yourself so that the drawing will fit onto a sheet of grid paper.
   The drawing does not need to show hidden lines.

Your teacher will look at the following to assess your drawing:

- The drawing accurately shows the design you that sketched on page 92. [2]
- The drawing shows the dimensions in the correct way. [3]
- The drawing is to scale, and the scale is shown. [1]

[Total: 12]

Week 3

LB page 89

Make improvements to the model and draw an artistic perspective drawing of it

This is **individual** work, although team members may help one another by sharing ideas.

Make your improvement to the model (60 minutes)

Cut out the parts that you are going to add to the structure to strengthen it, and then attach them to the structure with Prestik.

Test your model to see if it is now stable enough to withstand forces acting on its sides. If it is not, you have to make some more changes. [Total: 10]

Draw an artistic drawing in perspective of your model (60 minutes)

Most double vanishing point perspective drawings have vanishing points that are so far away that you cannot draw them on the paper. If the vanishing points are close to the drawing of an object, it looks as if you are looking at the object from very close, like a fly would see the object. The drawing below is an example of this.

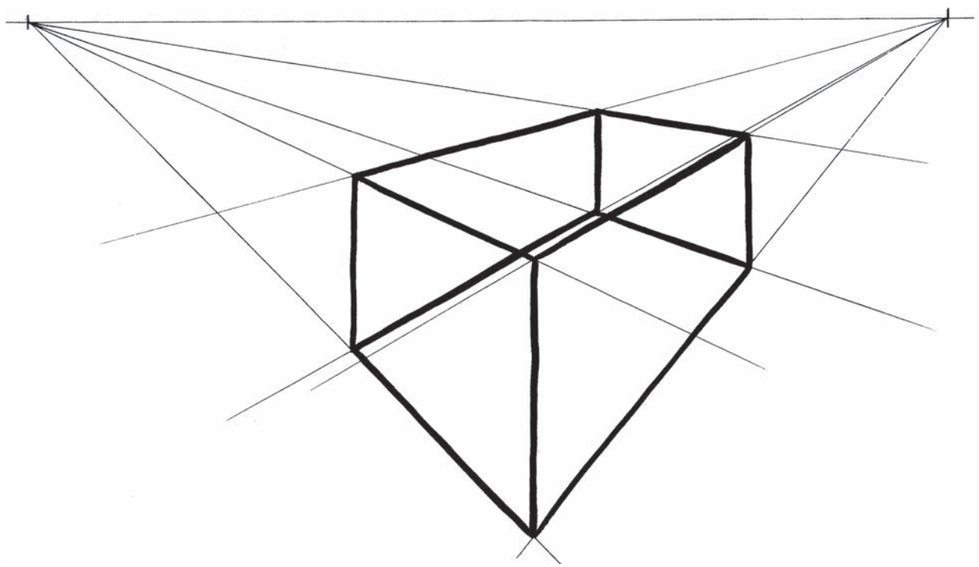

Figure 14: Looking at a rectangular frame from up close

This can look odd, and therefore artists mostly use vanishing points that are very far away and cannot fit on the paper.

Instructions for making the drawing

First draw a rectangular box into which the model will fit. Draw it in double vanishing point perspective. Use vanishing points that are far away and not on the paper. Draw feint lines for the visible as well as the hidden lines.

Then make a free-hand sketch of your model inside this box. Do not show hidden lines. After you have drawn all the outlines, use shading to make the sketch look more realistic. Hint: Look back at what you learnt in Chapter 4 about shading.

The following principle of perspective will help you to make the free-hand sketch:

Things look smaller the further away they are.

The drawing below shows how someone else sketched a motor car in double vanishing point perspective, by first drawing a box into which the car will fit.

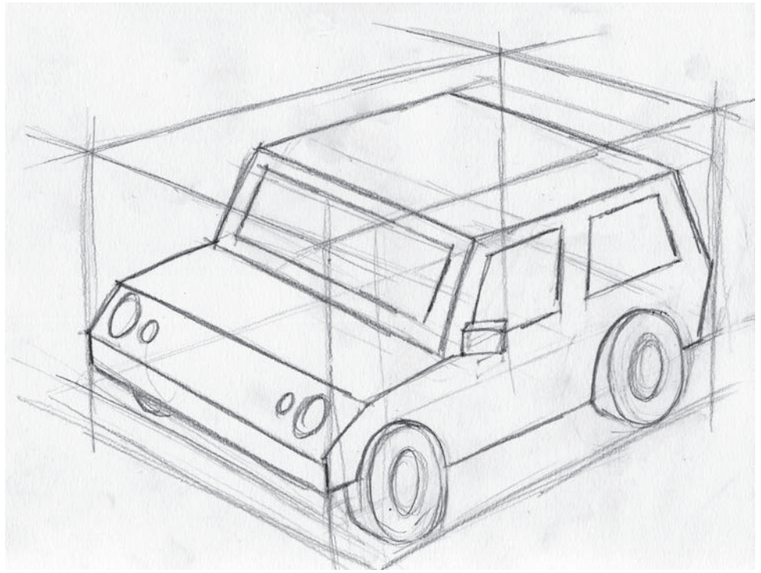

Figure 15: Making a double vanishing point perspective sketch of a complicated object

Something to do at home

Put this page on a large piece of newspaper. Make the lines of the rectangular frame longer to see where the vanishing points are.

Mark allocation

Your teacher will look at the following to assess your model:

- It is easy to understand what the drawing shows. [3]
- You first made a rough sketch before you made your final drawing. [2]
- You drew a rectangular box in which your model will fit, using feint lines for visible and hidden lines. [1]
- You drew the box in double vanishing point perspective, using vanishing points that are far away and not on the paper. [2]
- You showed all your construction lines as feint lines. [1]
- You showed the outlines of your model as dark lines. [1]
- You used shading to make the sketch look realistic. [2]

[Total: 12]

Next week

Next week, you will hold an "Expo" of your projects. Each team will have a table where they show their models, their design drawings, and their final drawings. Each one of you will get the chance to walk between the tables of other teams to look at their projects, and to ask them questions. This way you will learn how other groups solved problems in a different way than your team did. This may give you ideas for things that you will design and build in future.

If any of your drawings are not completed yet, complete them over the weekend.

Leave your model with the Technology teacher over the weekend. Do not take it home.

Week 4

LB page 92

Present your model and drawings (60 minutes)

Each person in your team should be in charge of your team's table for 15 minutes. While you are in charge, you have to answer questions of the other learners who will come to look at your project.

When you are not in charge of your team's table, you should walk around to look at all the other teams' projects. Ask them questions about why they designed their models in the way they did.

Write down and draw at least one new idea that you saw at another team's table. This should be an idea that you never thought about before you saw the other team's model.

Next term

Enjoy your Easter holiday! Next term, you will learn about the impact of technology on society and the environment. You will learn how technology helps people, but that it often has a negative impact on the environment. Fortunately, there are clever ways of reducing the negative impact on the environment.

TERM 2

CHAPTER 8

The impact of Technology on society and the environment

LB page 93

In this chapter, you will learn how plastic waste damages the environment. Then you will learn how thisnegative impact can be reduced.

8.1 What are things made of? 114
8.2 What happens to things when they are thrown away? 117
8.3 How can you stop people from throwing plastic bags away? 121

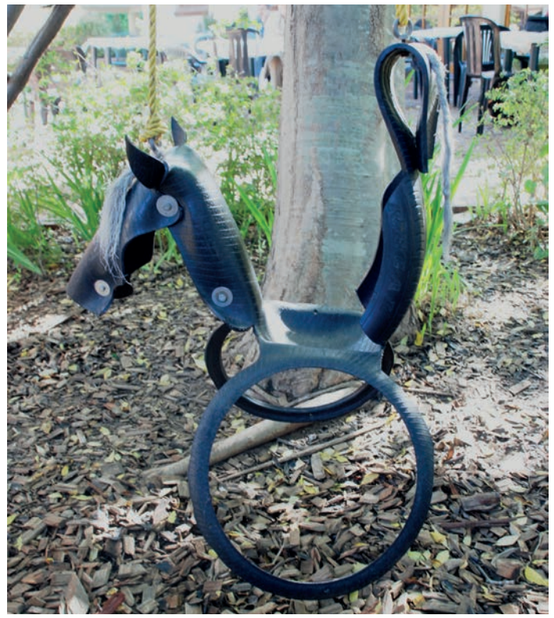

Figure 1: What is this swing made of?

The introductory pages will reinforce the learners' understanding of natural materials, synthetic materials and biodegrading processes. It is recommended that they read through this section carefully before moving on to section 8.1, as it provides background information. The diagram of a factory will assist with understanding; take them through the process carefully.

Materials required for this chapter:
pen and pencil

This chapter is extremely important from an environmental as well as a teaching perspective. The lessons the learners will be taught can have far-reaching implications on their awareness of recycling, extending beyond school into society and their home environments.
They will learn how plastic waste damages the environment and how this negative impact can be reduced. It is a chapter that encourages active participation, and the learners can become very involved in the recycling initiative.

8.1 What are things made of?

The learners investigate what materials are used to manufacture things. They are encouraged to look around at every item, such as their clothing, packaging and other materials. In the first exercise, they will identify the materials used to manufacture common items, and compare the material used today with the material used in the past. They must be *encouraged* to focus on disposable materials such as plastics and nylon, and compare these to natural materials used in the past. This is important, as it shows how dependent we have become on plastic and other non-biodegradable substances.

Use this exercise to introduce the practical questions and tasks they are going to have to do before the following lesson. The learners' attention must be focused on the litter aspect that affects the environment around them, and they must be encouraged to take note of the state of their surroundings. Before they undertake the homework, run through the questions with them and *ensure* they understand what they must achieve. The information section on Learner Book pages 94 and 95 will be very helpful to the learners.

8.2 What happens to things when they are thrown away?

This section immediately starts with questions relating to the learners' homework. Divide the class into workgroups of three learners, and let them discuss the questions. You can refer them back to the section on biodegradable and non-biodegradable materials at the beginning of the chapter. They must then answer the questions individually.

At the end of the lesson, guide them through the section on garbage dumps, and encourage participation around this topic; focusing on amounts of garbage, waste and health risks.

8.3 How can you stop people from throwing plastic bags away?

This section is a **case study**. Learners must answer questions based on what they discovered during lessons 8.1 and 8.2. After they have done this and you have reviewed their answers, introduce the report they have to write. It is recommended that the section regarding **plastic bags** be read aloud by yourself or a learner, and a short discussion take place about the separation of waste, and recycling.

The learners will then consider the four questions posed, and write a short report based on their individual investigations. If there is time before the end of the lesson, get a few learners to read their reports to the class, and let them compare experiences.

Remind the learners that they will need to bring waste paper (newspaper is ideal) and waste cardboard (any clean cardboard from boxes or packaging) for the next lesson.

LB pages 94–95

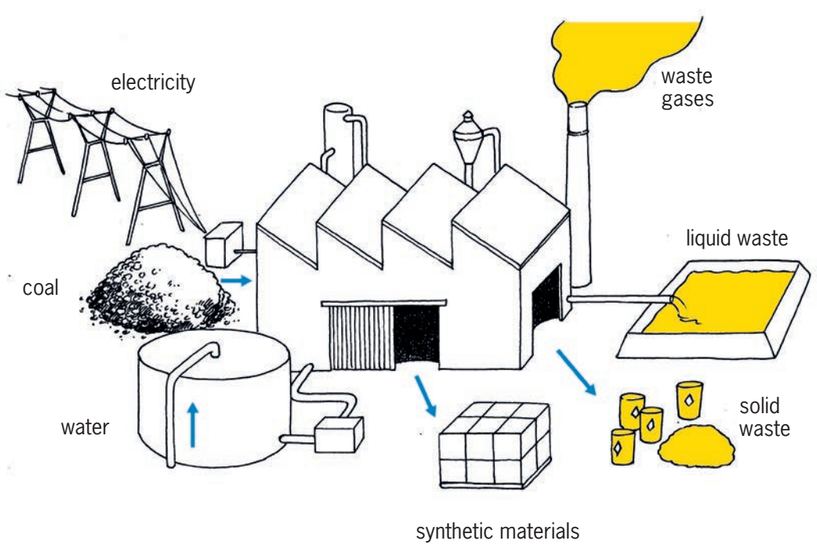

Figure 2: Waste released by a factory



Figure 3: A compost heap

8.1 What are things made of?

LB page 96

Investigate materials — LB p. 96

Look around you at the following objects in your classroom. Copy the table below. For each object, do the following:

(a) Write down what you think this type of object was made of hundreds of years ago, before there were synthetic materials.

(b) Write down what this object is made of today.

There may be other answers the learners can think of, these are only guidelines.

Object	What was it made of hundreds of years ago?	What is it made of today?
Shirt	Cotton	Polyester *Hint: Look at the label inside your school shirt.*
Jersey	Wool or cotton	Polyester/acrylic *Hint: Look at the label inside your school jersey.*
Pen	Wood or metal	Plastic
Something to write on	Papyrus/reeds/ animal skins *Hint: What did the Egyptians write on? What did the Khoisan draw on?*	Paper
Pencil case	Wood	Plastic
Paint	Natural materials such as egg white, crushed rock, water	Acrylic material PVA
Roof	Reeds, grass, slate tiles	Corrugated iron Concrete tiles
School bag	Leather, canvas	Plastic, artificial leather or canvas

After you have completed the table, discuss your answers with the learner sitting next to you.

Homework for the next lesson — LB p. 96

You need to do these exercises to be able to answer the questions in the next lesson.

1. Look at the contents of dustbins and garbage bags. Make a list of all the solid materials in the waste.

   In this question, the learners must focus on biodegradable and non-biodegradable waste

2. Stand in a street near your home. Look around you, without walking to another position. Count how many plastic bags you can see. Go to a different street and do the same again. Then copy and complete the table below.

LB page 97

	Number of plastic bags you can see
Street A	
Street B	

The answers to this question will vary. The learners must be encouraged to talk about the litter they can generally see.

3. Look at plastic bags lying around outside that still look new.
   Also look at plastic bags lying around outside that look old.
   Why do some plastic bags look new and others old? What made the old ones look that way?

   Some have been recently thrown away. The older bags are dirty, torn and unusable.

4. Look at new and old pieces of materials made from plants that are lying around, such as wood, cut grass, paper and cardboard. How do the newer pieces of this waste differ from those that have been lying around for a long time?

   The newer pieces of biodegradable material have not started degrading.

   The older pieces have started to degrade, rot or decompose.

How do you throw your waste away?

It is good for the environment if you put different kinds of waste in different garbage bags or boxes. This is called **waste separation**. For example, if you put all your glass waste into a box, then that glass can be taken by a waste collector to a factory that makes new glass bottles out of old glass. This is much better than if the old glass lies on a rubbish heap. We say that glass can be recycled. You will learn more about recycling next week.



Figure 4: The weekly waste from a household that separates waste

LB page 98



Figure 5: The weekly waste from a household that does not separate waste

8.2 What happens to things that are thrown away?

Discuss in groups of three or four — LB p. 98

To answer these questions, think back to the homework exercises you did.

1. (a) What are the differences between waste materials that have been lying outside for a long time and those that have been there for a short time?

   The older pieces have been subjected to weathering.

   (b) Which types of materials changed a lot with time? And which types of materials did not?

   The non-biodegradable materials have not started to rot or decompose, but they are dirty and ugly. The biodegradable materials have been affected by sun and rain, and are starting to turn to compost. Some metals (iron based) will start to rust.

   (c) Do some materials change more with time than others?

   Yes, some change quicker. The biodegradable materials will decompose at a rate depending on what they are made of. Plant material decomposes quicker than cotton. Paper decomposes quicker than wood. Iron based metals will rust, but aluminium corrodes much slower. Non-biodegradable materials decompose very slowly; the thicker they are the slower the process.

2. (a) What do you think will happen to plastic bags that lie in the environment for more than 10 years, or 100 years, or 1 000 years?

   After 10 years they will still be whole. They will be in the environment for hundreds of years, very slowly decomposing. After a thousand years, they will be almost gone, but the plastic material they were made of will still be there – it doesn't rot.

   (b) Do the plastic bags that are thrown away as waste just get more and more? Or do they biodegrade? Or do they go somewhere else?

   They continue to accumulate over the years. They only biodegrade after hundreds of years. If we don't recycle them, they won't go away.

Different properties of different materials LB p. 99

Siphosethu uses a **paper bag** to carry her shopping.
Brandon uses a **plastic bag**.
Thabang uses a **leather bag**.

They all reuse their bags, but all of their bags break after some time.

Answer the following questions for each type of bag on your own.

1. What will happen to the bag when it gets wet?

Paper bag	It gets soggy and falls apart.
Plastic bag	It gets wet, but nothing happens to it.
Leather bag	It gets wet, and if not dried carefully, can get hard and unusable.

2. Do you need to care for the bag in some way so that it will last longer?

Paper bag	There isn't anything you can do except to be careful it doesn't tear or get wet.
Plastic bag	It will last as long as you don't place it near heat, which will melt it. If it is in the sun too long it will lose its shape.
Leather bag	You can put special cream ('dubbin') on a leather bag, which will keep it soft and preserve it for years. It also helps make the leather waterproof.

3. Can the bag be fixed when it breaks? If yes, then how?

Paper bag	It can be fixed with sticky tape or glue
Plastic bag	It can be fixed with plastic cement, a type of glue that sticks plastic together; or it can be taped with strong tape.
Leather bag	It can be sewn together, or a special 'all-purpose' glue can be used.

4. What will happen to the bag if it is thrown away with other waste, like rotting food? Where will the bag end up? What will happen to it there?

Paper bag	It will turn into compost.
Plastic bag	Nothing will happen.
Leather bag	It will eventually biodegrade.

Homework LB p. 99

Think about a place where garbage is burned. You may have seen places like this.



Figure 6: A burning garbage dump

For these questions, encourage the learners to focus on the pollution: ground, air and smell. Make sure that they understand and emphasise the toxic nature of the pollution, ground and air, and the fact that the pollution can sink into the earth, and poison underground water sources as well.

1. What does the ground look like?

   Learner's own answers.

2. What does the air look like?

   Learner's own answers.

3. What does it smell like?

   Learner's own answers.

LB page 100

8.3 How do we stop people from throwing plastic bags away?

Case study: The negative impact of plastic shopping bags on people and the environment LB p. 100

During the past two weeks you have read and experienced a lot about the impact of plastic materials on people and the environment. Think back about this when you answer the following questions.

1. What can happen if an animal eats a plastic bag?

   It can choke the animal by blocking its windpipe, or the plastic bag can get stuck in the animal's throat and kill it slowly because it can't swallow food or water. If the animal manages to swallow the bag, the plastic can jam up its digestive system, which could also kill it.

2. (a) What happens to people and animals who breathe in the smoke and gases that comes from burning plastic?

   The smoke is toxic (poisonous) and can cause serious health problems in people or animals who breathe in the smoke. These problems are sometimes immediate, and sometimes slow, but they will always result from breathing in the poison.

   (b) Where do the smoke and gases go after the fire has burnt?

   Into the atmosphere. The heavy particles can combine with rain, causing **acid rain**, or can deposit on crops, which then get eaten.

   (c) What stays behind on the ground after the plastic was burnt?

   The left over material that hasn't been destroyed by the fire. This is still toxic and will last for many hundreds of years.

3. What does it look like when there are lots of plastic bags lying around your house or school, or in the street, or in the veld?

   This question can be used to encourage the learners to talk about the effects of visible pollution and how unsightly it is in the community, apart from the health and environmental risks posed.

4. Look at the photo below:



Figure 7

   What can happen when plastic bags end up in a river or stream?

   It can block up water pipes. It can be swallowed by animals drinking water. It can trap other litter, causing streams to become polluted. It can pose health threats by creating stagnant pools that breed mosquitoes and other insects. The water quality will also deteriorate in these pools.

5. What happens to plastic if it lies in water for a long time? Does it change?

   Nothing happens. It does not biodegrade, it just gets dirtier and uglier.

Report: Reducing the negative impact of plastic bags LB p. 101

Until 2003, South African shops gave customers free plastic bags to carry their shopping. These bags were very thin, and broke easily. This meant that the bags were thrown away after they were used.

Our government wanted to reduce plastic waste. In 2003, it banned supermarkets from giving customers shopping bags for free, and banned the use of very thin plastic shopping bags. These bags are illegal.

Since then, supermarkets ask customers to pay for thicker, stronger shopping bags that can be used over and over again. The bags still look very thin, but they are less thin than the shopping bags used before 2003. Customers can choose not to buy new bags, and rather take old shopping bags with them to the shops.

The new, thicker plastic shopping bags are also easier to recycle by ***recycling*** *factories. But this only helps if people separate their waste so that the plastic bags can be sent to a recycling factory.*

Get the learners to discuss the four questions that are given, to base their reports on. These all relate to the national drive to get consumers to reuse shopping bags, and discourage them from throwing them away. If the learners can think of other topics or points on this matter, particularly on how to prevent plastic ending up on dumps or in the streets, they are to be encouraged.

Check the reports to ensure that they understand the concept of recycling, as this will be important for the next two chapters.

Think back about what you saw when you were looking at the contents of dustbins and garbage bags, and at plastic bags lying around outside. Write a half-page report about this to answer these four questions:

1. Do you think that making people pay for thicker, reusable shopping bags helps to reduce the amount of plastic shopping bags that people throw away?
2. Are some shops still giving away thin plastic shopping bags for free?
3. What percentage of people do you think separate their plastic waste from the waste made of other materials?
4. Are there other things people can do so that less plastic bags are thrown away?

Next week

Next week you will be working with paper and cardboard in class. Instead of buying new paper and cardboard, you will reuse old paper and cardboard. Gather some paper and cardboard waste over the weekend, and bring it with you to school at the start of next week. Gather things like cardboard packaging for food.



Figure 8: A wind turbine generates electricity by using the force of the blowing wind. The blades of the turbine are made of a synthetic material called "epoxy resin," that is combined with fibres. This makes the blades very strong, but at the same time very light. Also, it is possible to make this material into a special shape.

Chapter 9
Making new things out of old things

LB page 103

In the following two weeks, you will learn how paper is recycled. You will also learn how to make new objects out of old pieces of cardboard. You will make your own packaging for a product.

9.1 What are paper and cardboard made of? 126
9.2 How are paper and cardboard recycled? 128
9.3 Draw the development of a box 132
9.4 Make your own box 134
9.5 Your final box 136
9.6 Make a pencil case 137



Figure 1: Gathering paper and cardboard waste separate from other waste

In Chapter 8, the learners focussed on plastic, and were introduced to the concept of recycling. In Chapter 9, you will guide them through a similar exercise, using paper and cardboard. They will initially learn how paper and cardboard is made, and this will guide them in their understanding of how these materials can be recycled.

This is a practical lesson with planning, developing and constructing, and the learners will use recycled materials to make new items. The two illustrations on pages 106 and 107 give an excellent visual representation of the paper making and recycling process.

Materials required for this lesson:

Cardboard boxes: small (about the size of an aspirin box) and large (about the size of a cereal box)

Drawing paper

Ball point pen

Pencils

Ruler

Glue (either Pritt, paper glue or homemade glue using flour and water)

Scissors

9.1 What are paper and cardboard made of?

You must focus on the fact that this section is referring to making paper out of recycled paper. You can remind the learners that new paper is made from wood pulp, and lots of trees have to be cut down to keep this supply going!

Take them through the recycling process, noting that even paper cannot be recycled forever, as the fibres are broken down to be too short and weak.

For the case study, let the learners answer the questions individually in their exercise books.

At the end of the lesson remind the class that they have to bring small boxes to class for the next lesson. Pill boxes (supplied by an adult) or similar size boxes are ideal for this purpose.

9.2 How are paper and cardboard recycled?

The learners should all have small boxes for this week's lesson. It is recommended that you bring a few spare boxes as well, as some learners may not be able to bring their own.

Deconstruct the boxes as per the instructions in the workbook, taking the learners through the process, and pointing out the parts of the boxes they need to know.

Then let them answer the questions individually. The next section is short, but you should take them through it before they answer the questions that follow. This is a discovery process, and although they are dealing with a common object, the terms used will be new to them.

At the end of the lesson, remind them that they have homework to do for the next lesson, they need to do the preparation and bring the material required.

9.3 Draw the development of a box

When the learners open their boxes, they must ensure that they don't cut through the tabs, as these will be important later on. Explain how the feint and dark lines work, and the importance of making sure that only the outline that is to be cut is marked with a dark line.

They can practise this until they have neat templates to make new boxes with. At home the learners must make another cut out of their template, as neatly as possible to bring to class for the next lesson.

9.4 Make your own box

In this lesson, the learners explore the qualities of cardboard, following the same steps used for the paper boxes in 9.3.

Before constructing their boxes, they need to have practical explanations of how to use glue correctly, and how to fold cardboard. Use the Learner Book explanations to guide them through the process.

9.5 Your final box

In this lesson, the learners will cut out the shape of the box using cardboard, and then using the techniques you worked through with them, fold and glue the boxes. Make sure the tabs they are going to glue have been cut out properly, or else the boxes will not glue together.

9.6 Make a pencil case

This final section tests the learners' designing, drawing and creating skills. Using the techniques they learnt, they must design a version of a box that can contain their pencils and pens. It is important that they show dimensions when planning the pencil case: it is a good idea for them to measure the first box they made to get an idea of the dimensions they will be working with. If there is not enough time to complete this task, they can finalise it as homework.

Using the paragraphs on page 118, you can sum up the concept and importance of recycling, and the benefits to the community.

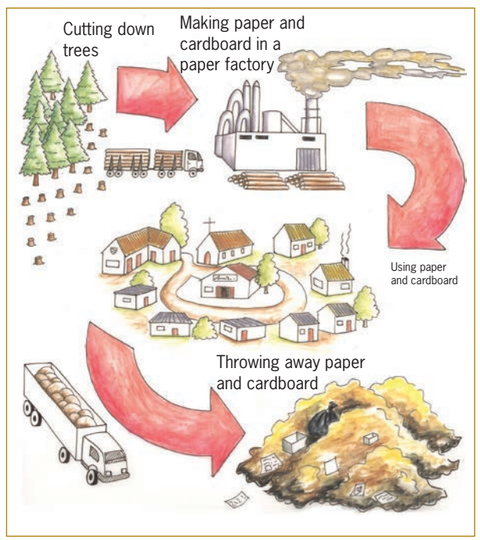

Figure 2: Using paper and cardboard without recycling it

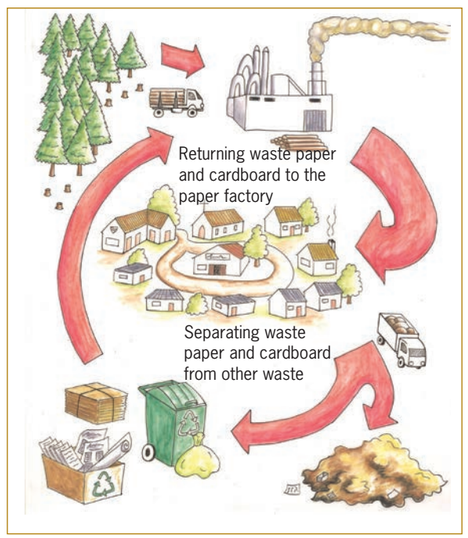

Figure: 3: Using paper and cardboard, and recycling it

LB page 106

9.1 What are paper and cardboard made of?

A paper recycling factory makes new paper or cardboard out of waste paper. The way this is done is explained below. You can also make recycled paper at home.

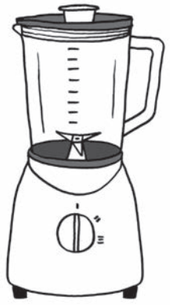

Figure 4

1. Waste paper is mixed with warm water and chemicals. It is stirred and chopped up by a machine to separate the thin little fibres the paper is made of. The machine that stirs and chops up the mixture of paper and water, works like a food blender.
   The mixture of chopped-up paper and water is called paper **pulp**.
2. The pulp is poured through a **sieve**. Old glue and fibres that are very short pass through the sieve. Long, strong fibres remain on top. These fibres then go to a stirred tank where chemicals are added to remove ink from the pulp.
3. New glue is added to the pulp. If the recycled paper will be used for writing and printing, some clay is also added to the pulp, because the clay gives the paper a smoother surface.
4. The pulp goes to a paper-making machine, where it is pressed between two rollers to give it the required thickness, and to squeeze out water.
   Instead of waiting a long time for the paper to dry, it is dried more quickly by heating it and blowing hot air over it. Once the paper is dry, it is cut into the necessary size and packaged.

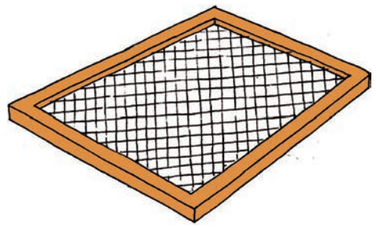

Figure 5: A sieve

Paper fibres can be recycled as many as seven times. But each time it is recycled, the fibres get broken into shorter and shorter fibres. If it is recycled too many times, the fibres become too short and weak to use for making paper again.

Case study: Paper recycling LB p. 106

1. What is cardboard made of?

   Waste paper, water and chemicals.

2. Why can paper not be recycled more than seven times?

   The fibres of the recycled papers are broken down during recycling, and get too weak and too short.

3. What will happen when the holes of the sieve are too big?

   Too many strong fibres will be wasted as they will go through the holes. Only the short, weak fibres must be sifted out.

4. What will happen when the holes of the sieve are too small?

   Too many weak fibres will stay in the paper, making paper of a poor quality.

LB page 107

Homework for the next lesson LB p. 107

Find some old empty pill boxes and bring them to school for the next lesson. If you cannot find a pill box, bring another **small box that can close after you opened it**. Try to find at least two such boxes. Some spices are packaged in boxes like these, as well as some light bulbs.

Safety warning

Do not remove pills from pill boxes. Pill boxes have labels that say what the pills are and how to use them. If those labels are lost, somebody may not know what medicine to take and how to take it.

Ask your parent or another adult for an empty pill box.

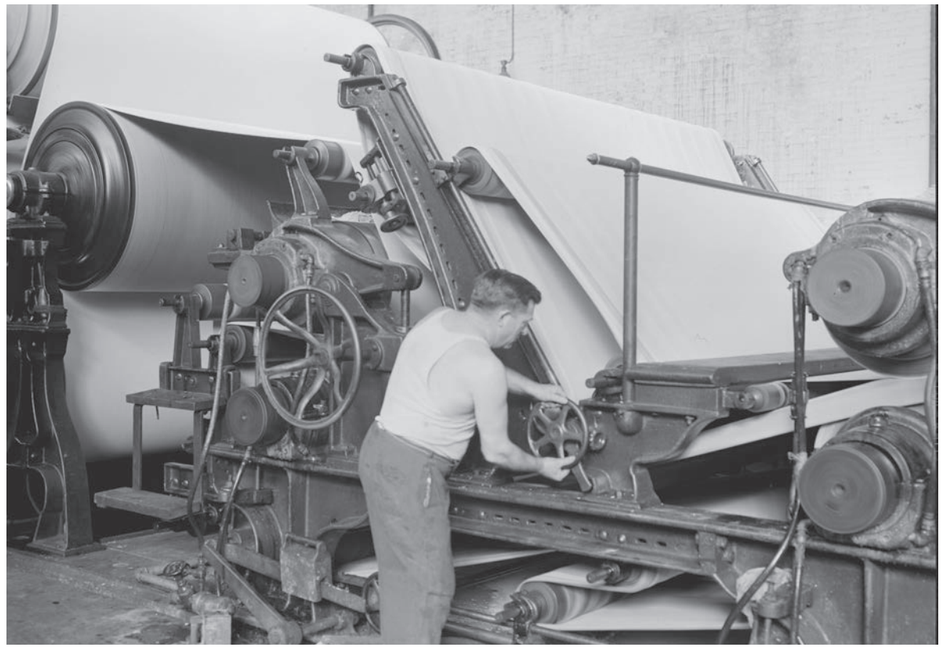

Figure 6: Part of an old paper-making machine

LB page 108

9.2 How are paper and cardboard recycled?

Take out one of the small boxes that you brought to school. Look carefully at all sides of the box. Then open the box so you can look inside it, but do not tear or cut the box to open it. While you are looking at the box, try to imagine how this box was made out of flat cardboard.

The following words describe different things about a box:

- A **face** is one of the flat surfaces of the box that can be seen from the outside.
- An **edge** is the line where two faces meet.
- A **corner** is where three faces meet at a single point. At this point, there are also three edges that are meeting.
- A **tab** is an extra flap attached to a face that helps to keep the box closed. It cannot be seen from the outside of a closed box.

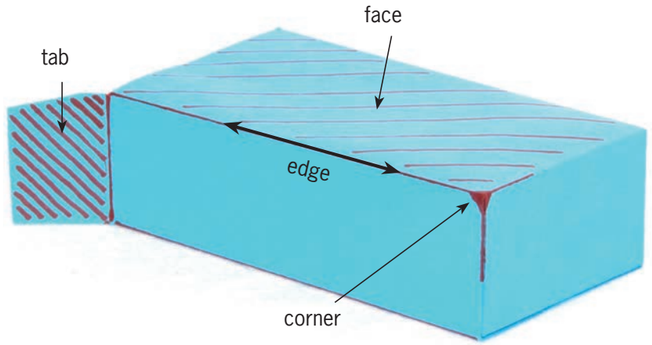

Figure 7: The different parts of a box

Think about the different parts of a box LB p. 108

1. How many faces does the box have?

   The box has six faces.

2. How many edges does the box have?

   The box has twelve edges.

3. How many corners does the box have?

   The box has eight corners.

4. Look at the two drawings of the box below. The drawings were made by looking at the box from different angles. A name is written on each face of this box. Write the same names on the different faces of your own box.

   Check the learners' answers on the boxes.

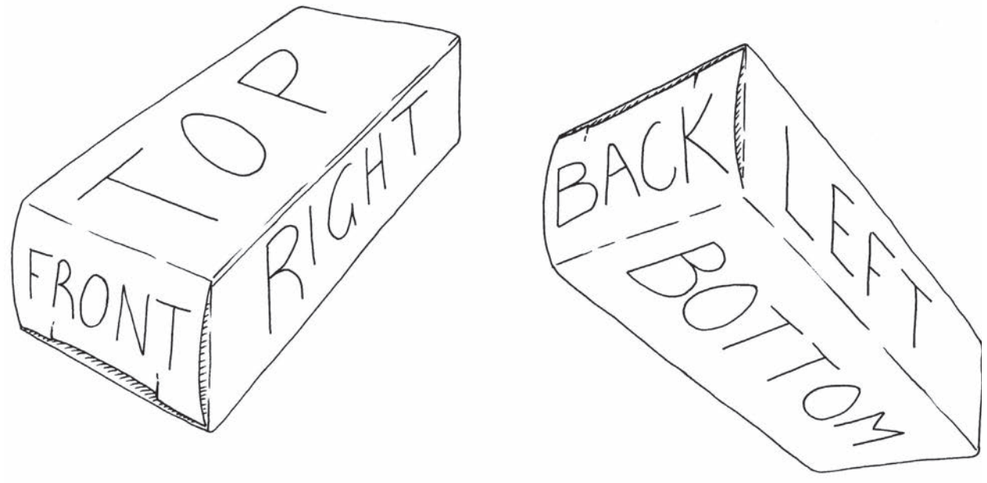

Figure 8: Giving names for the different faces of a box

5. Out of how many separate pieces of cardboard was the box made?

   The box was made from a single piece of cardboard

There are three different ways in which an edge can be made in a cardboard box.

- **Unbroken edge:** The cardboard is simply folded along a line.
- **Edge made using a tab**: One of the two faces that come together has a tab attached to it. This tab folds in underneath the other face to close the box.
- **Edge made with a tab glued to another face:** This is the same as an edge made with a tab, but this time the tab is permanently attached to the other face by glue.

The different types of edges of your box — LB p. 110

1. The photos below show different edges of a box.
   Write down what kind of edge is on each of photos A, B and C.



Figure 9

Unbroken edge ..... Edge made using a tab ..... Edge made with tab glued to another face.

2. How many of the edges of your box are unbroken edges?

   Six edges are unbroken .....

3. How many of the edges of your box are made using tabs that are not glued?

   Two tabs .....

4. How many of the edges of your box are made using tabs that are glued?

   Six tabs .....

5. How many tabs in total were used to make the box?

   Eight tabs .....

Homework — LB p. 110

1. (a) Find an old cardboard box. It should be made of **thin, solid cardboard**. Cereal boxes and other boxes in which food are packaged are normally made from cardboard like this. The box must not be made of **corrugated cardboard**.
   (b) Cut the box and fold it flat. The flat sheet of cardboard in front of you should be at least as big as an A4 sheet of paper.
   (c) Do the same to make two more cardboard sheets.

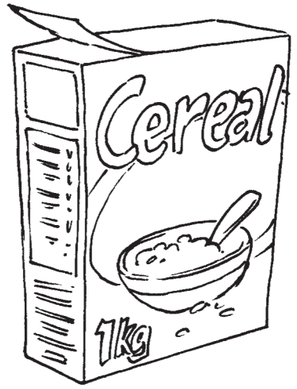

Figure 10: Boxes for packing food are made of thin, solid cardboard.

2. Find at least eight old A4 paper sheets. One side of each of these sheets should be clean, because you will draw on it.
3. Bring the paper and cardboard sheets to all your Technology lessons next week. You will reuse this old paper and cardboard to make paper and cardboard boxes.
4. Bring your pill boxes, or other small boxes, to your next lesson again.



Figure 11: Large boxes are made of corrugated cardboard.

9.3 Draw the development of a box

LB page 111

Cut the box open along the edge where it was glued together. Fold it flat. We call this the **flat plan** or **development** of the box.

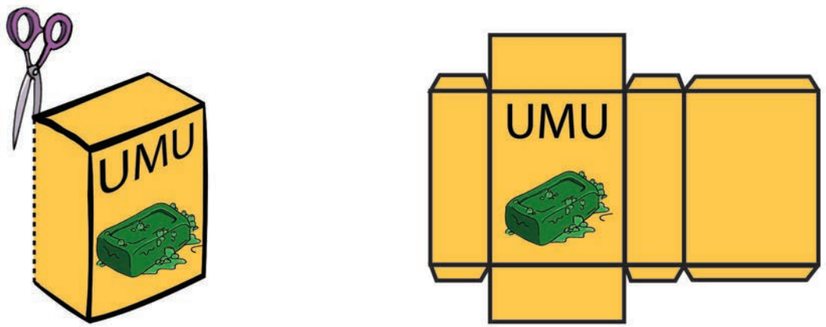

Figure 12: You can unfold a box to make one flat piece of cardboard. This is the development of a box.

Trace the development onto a piece of paper, using a **feint line**. Trace it in the middle of the blank piece of paper, so that there is space left around the traced development.You can use the development many times to trace, like the illustration below shows.

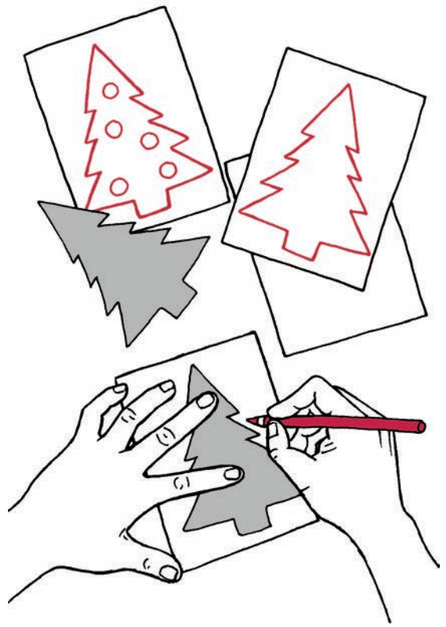

Figure 13: Tracing a shape to make many Christmas cards with the same picture.

When you traced the development of the box, your lines were not very neat and straight. That is why you made the lines feint. Now use a ruler to draw **straight dark lines** over the feint lines of your development. The dark lines has to show where the paper has to be cut. *Do not draw dark lines for any other reason, otherwise you may later cut off something that you don't want to cut off!*

Add **dashed lines** to show where the paper will be folded.

Now, cut out your development. *Do not cut the dashed lines that are for the folds.* Fold the development to make it into a box.

If you accidentally cut off something that you should not have cut off, don't worry. Most people make mistakes when they try to design and make a box for the first time. But learn from your mistakes. Ask yourself what you should do next time to make the box right, or better.

Homework LB p. 112

1. (a) Make a new paper model of your box. This time make a neater one. Think carefully before you start cutting out your development, to make sure that you do not cut off something that should not be cut off.
   Remember that your paper model of the box should be made out of just one piece of paper.
   (b) Bring the cardboard box that you cut open and folded flat, as well as the paper model you made of this box, to the next lesson.
2. Remember to bring the paper and cardboard sheets that you gathered over the weekend to each lesson next week.

9.4 Make your own box

LB page 113

Learning the tricks

Now that you have successfully made a paper box, you will prepare for making a stronger box out of cardboard, using the same design.

Cardboard is more difficult to fold. And thick cardboard can crack when you fold it. You first need to learn a **trick** for folding cardboard. You also need to learn how to join two pieces of cardboard together with glue. You will have to do it in such a way that the glue will dry quickly, and the joint will be strong.

You will make a cardboard box this week, but you first have to learn a few **tricks**. People who do technological work call tricks like these **techniques**. It makes sense that the word technology is similar to the word technique!

How to glue cardboard

You will join two pieces of cardboard with white wood glue. But first do an experiment to find out whether it is better to use a lot of glue, or only a little bit of glue.

Join two small pieces of cardboard with a thick layer of glue between them. Press the pieces of cardboard together for two minutes, then let go. Has the glue dried? Try to gently pull the two pieces of cardboard apart. Is the joint strong?

Now try to join two other pieces of cardboard. This time use very little glue. Put only a drop of glue on the cardboard, and then spread it with your finger. Wood glue is not poisonous, and you can wash it off with water. The cardboard should look wet and shiny. It should not look white like the glue. Press the pieces of cardboard together for two minutes, then let go. Has the glue dried? Try to gently pull the two pieces of cardboard apart. Is the joint strong?

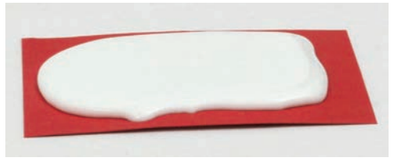

Figure 14: Using a lot of glue

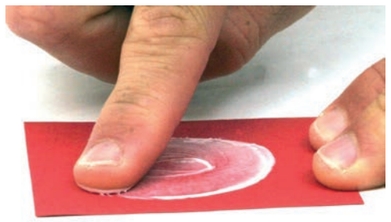

Figure 15: Using very little glue

How to fold cardboard

LB page 114

To fold cardboard to make a 90° bend, you first need to do the following experiment to find out what the best technique is.

Fold a rectangular piece of cardboard in half. Use a thick piece of cardboard, like the cardboard that a cereal box is made of. The length of the fold should be at least 10 cm. Cut three pieces of cardboard that you will fold in half in different ways.

With the first piece of cardboard, draw a pencil line on the inside and then fold along that line. Fold it all the way over, using the end of your pencil to make the fold sharp. Then bend it back so that it forms a 90° bend.

To fold the second piece of cardboard, first make a groove on the outside of the cardboard. Put your ruler where you want the fold to be, then draw a line with a ball point pen. Press hard with the pen, to make a groove in the cardboard. Grip the ruler tightly so that it does not move while you draw the line. Draw the same line two or three times, to make the groove deeper. Fold the cardboard along this groove. Fold it all the way over, using the end of your pencil to make the fold sharp. Then bend it back so that it forms a 90° bend.

To fold the third piece of cardboard, first make two grooves on the inside of the cardboard. Make a groove in the same way as before. The two grooves should be parallel, and 1 mm to 2 mm apart. Fold the cardboard along these grooves. Fold it all the way over, using the end of your pencil to make the fold sharp. Then bend it back so that it forms a 90° bend.

Now look closely at each of the three folds. Is it a neat fold? Are there any cracks on the outside of the fold? Was it easy or difficult to make the fold? Is the fold exactly where you wanted it to be?

Which way of folding do you think is the best?

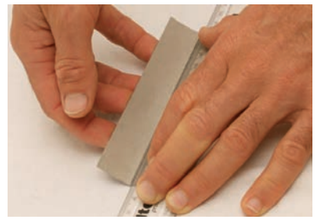

Figure 16: Make a fold without first making a groove.

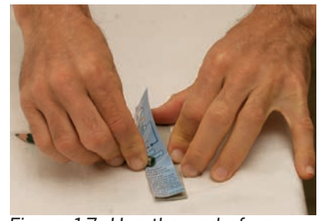

Figure 17: Use the end of your pencil to make the fold sharp.



Figure 18: Make a fold by first making a groove on the outside.



Figure 19: Make a fold by first making two grooves on the inside.

9.5 Your final box

LB page 115

Use the cardboard box that you folded flat to trace the same design onto a flat sheet of cardboard. (See Figure 12 on page 134.) Use feint lines. Once again draw the glued tab in the position where it was originally attached to the single piece of cardboard.

Do the same as you did to make your paper model of the box. But this time, use the best technique to make a fold in the cardboard.

When you have cut and folded the cardboard, first test whether it will make a box, and that all the tabs are there. If it is correct, then glue the one tab to the face to which it should be glued. Use the right amount of glue.

If you have time left in the lesson, also do the following activity.

Something extra you could do to make your box close better

Look closely at the tabs of a pill box. You will see small cuts in some of the tabs. What do you think is the purpose of those small cuts?	Make a new cardboard box, but this time also make those small cuts.



Figure 20: The small cuts in a tab that is used to open and close the box

9.6 Make a pencil case

Design a new box of a different size. The new box will be used as a pencil case. You should be able to fit two pencils, two pens, an eraser and a sharpener in it. You will design the pencil case by using the same ideas that you used to make your previous cardboard box.

First make a rough plan of how the development for the box will look. Do this on the next page. The rough plan should show all the **dimensions** of the development. Dimensions mean the same as measurements. To draw up the rough plan as quickly as possible, make the drawing by hand, without a ruler.

Then draw the plan accurately on a piece of cardboard, using your ruler to measure and draw straight lines. Remember to use dashed lines to show where the paper will be folded. Do not cut along the dashed lines.

Go on and make your own cardboard pencil case.

Make a rough sketch of a development for a pencil case:

When the learners draw the plans for this box, refer them to the plan in Figure 12. They can use the same idea, but alter the dimensions to make the box longer and narrower. The principles of the tabs and the shape should remain the same.

Reduce, reuse, recycle

LB page 116

Last week you learnt that it damages the environment when more and more plastic is made and thrown away. You can reduce this negative impact on the environment in different ways. Firstly, you can buy less plastic things, which is called **reducing your consumption**. Secondly, you can use some things over and over, so that you don't have to buy new things. This is called reusing things.

This week you learnt about **recycling**. What if you have something, and that something gets broken or you don't need it anymore? Then you have to throw it away. Fortunately, there is a clever way of throwing things away, by **separating the different types of waste**. For example, if you and your family collect all your plastic waste separately, then someone can take that plastic to a recycling factory where new plastic is made from the old plastic.

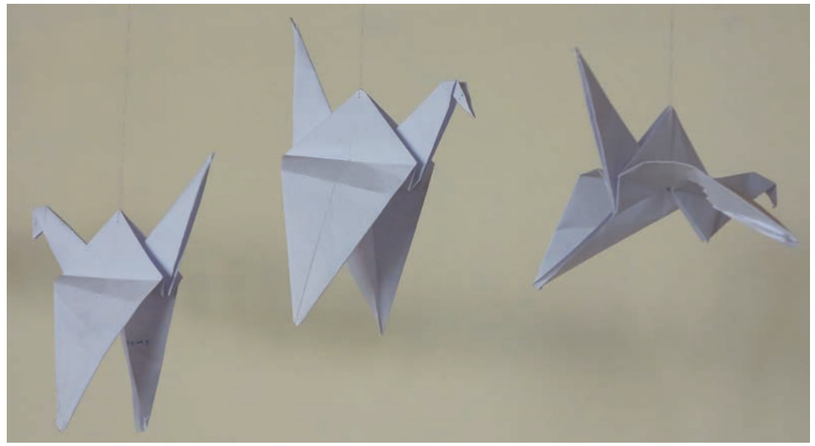

Figure 21

Next week

Next week, you will learn where electricity comes from. Generating electricity has a negative impact on the environment. Burning wood or gas or paraffin for heating or cooking, also has a negative impact. You will think of ways to reduce this negative impact, by designing a house in a clever way.

Chapter 10 Mini-PAT:
Design a house to use less energy

LB page 117

When electricity is generated, it has a negative impact on the environment. To burn wood or gas or paraffin, also has a negative impact. During the next three weeks, you will think of ways to reduce this negative impact by designing a house in a clever way.

Week 1

The hidden cost of electricity 141

Week 2

Save energy by using less building materials 153

Week 3

Build a model of a house 165

Week 4

Make improvements to your model house 175

Week 5

Present your model of a low-energy house 178

The assessment will be marked as follows:

Investigate:

The different parts of a power station ..... [3½]
Carbon dioxide ..... [4½]
What can you do to release less carbon dioxide? ..... [6]
What forces act inside a beam that bends? ..... [6]

Design:

How to improve a house to use less energy ..... [10]

Make:

Build a model of a house ..... [5]
Isometric projection drawing of your planned improvements ..... [15]
Improve your model house ..... [20]

[Total: 70]

In this mini-PAT, the learners will learn about how electricity is generated, the impact that this generation has on the environment, and the "hidden costs" of generating electricity.

In order to highlight these issues, the practical work involves the planning of an environmentally friendly, low-energy house. They will learn methods to reduce energy consumption, and incorporate these in the building of a model house.

Materials required for this project:

Pen or pencil
Cardboard
Scissors
Ruler
Glue
Prestik

Week 1

The hidden cost of electricity

During this week, the learners are first taken through the process used to generate electricity to get an understanding of how it works, and how this process impacts on the environment.

They are given a basic understanding of the **carbon cycle**, which is illustrated on page 127 to simplify the process. This is followed by basic questions that will allow you to make sure they can follow the process.

This is followed by an easy explanation of the **greenhouse effect**, which is also illustrated to simplify understanding.

These two principles are then tied into the generation of electricity, and it is important that the learners understand the meaning of hidden costs of generating electricity. They must work carefully through the paragraph that explains the use of electricity to produce everything that has been manufactured.

The class will engage in a discussion that centres around ways to use less fuel: wood, gas or electricity. Use the questions on pages 129 and 130 to promote the discussion, then get the learners to answer the questions individually in their books. There is a section at the end of this week on page 131, which the learners can work on at home.

Week 2

Save energy by using less building materials

The learners will base their planning on what they learnt in Week 1. To assist them in this, they will revise work from earlier chapters. They can refer to these chapters to answer the 5 questions that are asked relating to forces.

Reinforced concrete and plywood

Use Figures 18, 19 and 20 to explain how reinforced concrete is made, and why it is stronger than ordinary concrete.

Use Figures 21, 22 and 23 to explain how plywood is made, and how the cross-graining makes it stronger. You can ask the learners to give examples of where these materials should be used for their strength.

Investigate properties of different materials

Apart from the examples given, you can ask the learners to think of various materials they encounter on a daily basis, and what the properties of these materials are.

Steel I-Beams

It must be remembered that the main concept is using less material whilst not losing strength. The I-Beam can be used very effectively to demonstrate this.

Figures 28 to 33 illustrate the concepts of force and load graphically.

Week 3

Build a model of a house

Ensure that you have the materials necessary to make the models in preparation for this week. The learners should bring cardboard; old cereal boxes are recommended.

Each learner must make his or her own model as they are being marked on the improvements in Week 4.

The plans are simple to follow, but close supervision must be given around the cutting of the shapes of the house. The learners *must* understand that if they make mistakes they can start again, a badly cut shape will not work.

The learners must follow the instructions very carefully.

Team meeting on how to improve a house.

The learners can be divided into groups for this exercise. They need to discuss questions 1 to 5 as a group, and come up with solutions to improve energy usage.

Once the group discussion is over, each learner must write down the ideas in the workbook, using their own words and descriptions of how to solve the problems.

Drawing your planned improvements to the house.

This is also an individual exercise, based on the ideas the learners wrote in the previous section.

1. The improvements will be sketched free-hand in 3D by the learners, and will be labelled.

You will be marking these sketches based on the following criteria:

- They have shown at least one improvement on the outside of the house. [1]
- The improvements will really reduce how much energy the house will use, and it will be cheap and easy to make the improvements in real life. [2]
- It is easy for someone else to understand what they have sketched. [2]
- The labels and notes explain the improvements well. [2]

2. The improvements will be drawn in an isometric projection showing the planned improvements.

You will be marking these sketches based on the following criteria:

- It has an appropriate heading. [1]
- It is made from the correct viewing point. [2]
- It shows all the improvements shown in their sketches. [1]
- It shows all the visible lines of the house. [1]
- It shows all vertical lines as vertical and all horizontal lines at 30°. [2]
- It is neat. [1]

[Total: 15]

Before the end of the lesson ensure that the learners understand the homework they need to complete before the following lesson.

Week 4

Make improvements to your model house

This work will be done individually, but will require close supervision. You will mark the models out of a possible 20 at the end of the hour's session.

Evaluate your improvements to the house

The learners will be evaluating their own and two other models. Ensure, as far as possible, that the process is fair.

LB page 118

Week 5

Present your model of a low energy house

The team will give their presentations in the groups that you divided them into in Week 3. You can give guidelines to each group, but it is important that they go through the process of allocating and delegating work as a team.

Facilitate the presentations, ensuring that the learners keep to the schedule.

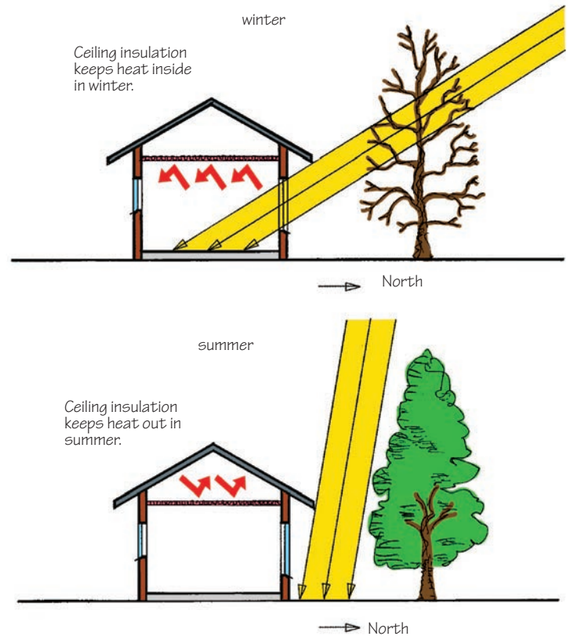

Figure 1: A cleverly designed house lets the sun's heat in on a winter's day, but keeps it out on a summer's day.

Week 1

LB page 119

The hidden cost of electricity

In the last few years, the cost of electricity has increased a lot. Some people are unhappy about this, because they don't have enough money to pay for electricity.

Electricity also has another cost that has nothing to do with money. This is the "cost" of electricity to the environment. Just like the amount of money that people have changes when they pay for electricity, so the environment changes when electricity is generated.

To make electricity is usually called to **generate** electricity.

This week, you will learn how the environment is changed by electricity generation. This change is often bad for the environment. You can say that electricity generation has a **negative impact** on the environment.

You will think about ways that this negative impact can be reduced.

Where does electricity come from? (30 minutes)



Figure 2

LB page 120

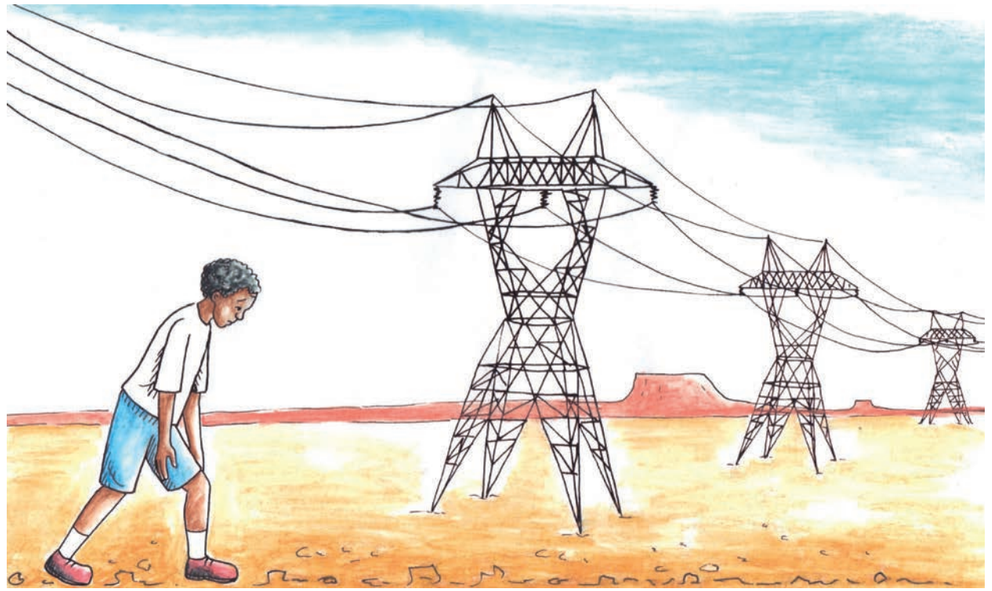

Figure 3



Figure 4

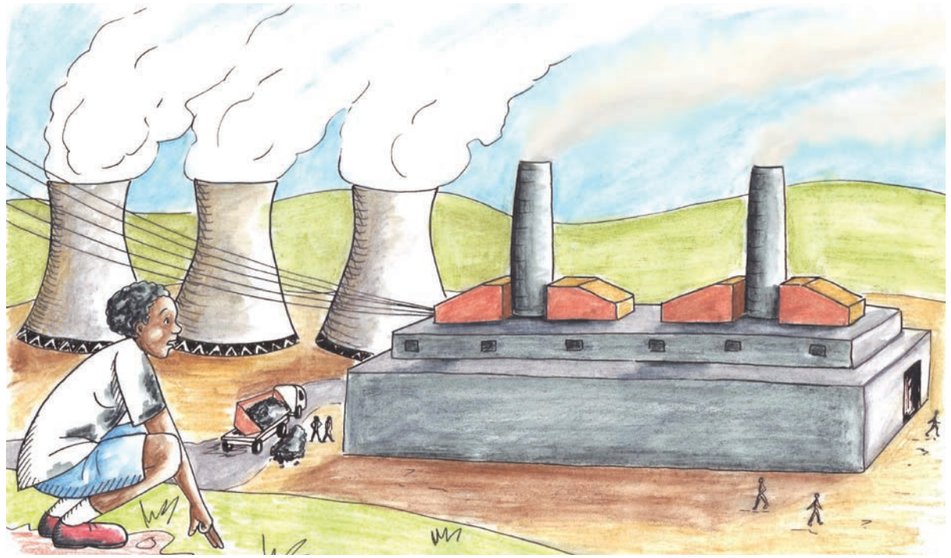

Figure 5

The boy followed the electricity lines to see where electricity comes from. When he went inside the power plant, a technician told him how a coal-fired power plant works. This is what she told him:

"In a power station, coal is burnt underneath a tank full of water that is called a boiler. The heat from the fire makes the water boil and evaporate to form steam with a high pressure. The high pressure steam blows through a turbine and makes it turn. This is very much like the wind making a wind pump turn. A device called a generator converts the rotational movement of the turbine into electricity. The gases and smoke from the fire passes through a filter before it goes through the chimney into the air. The filter removes most of the ash and soot particles, so that there is only a little bit of smoke that comes out the top of the chimney."

When a balloon bursts, or when there is a puncture in a bicycle or a motorcar tyre, the air inside bursts out very quickly and strongly. This is because the air inside a balloon and a tyre is under high pressure.

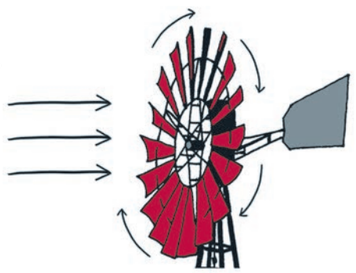

Figure 6

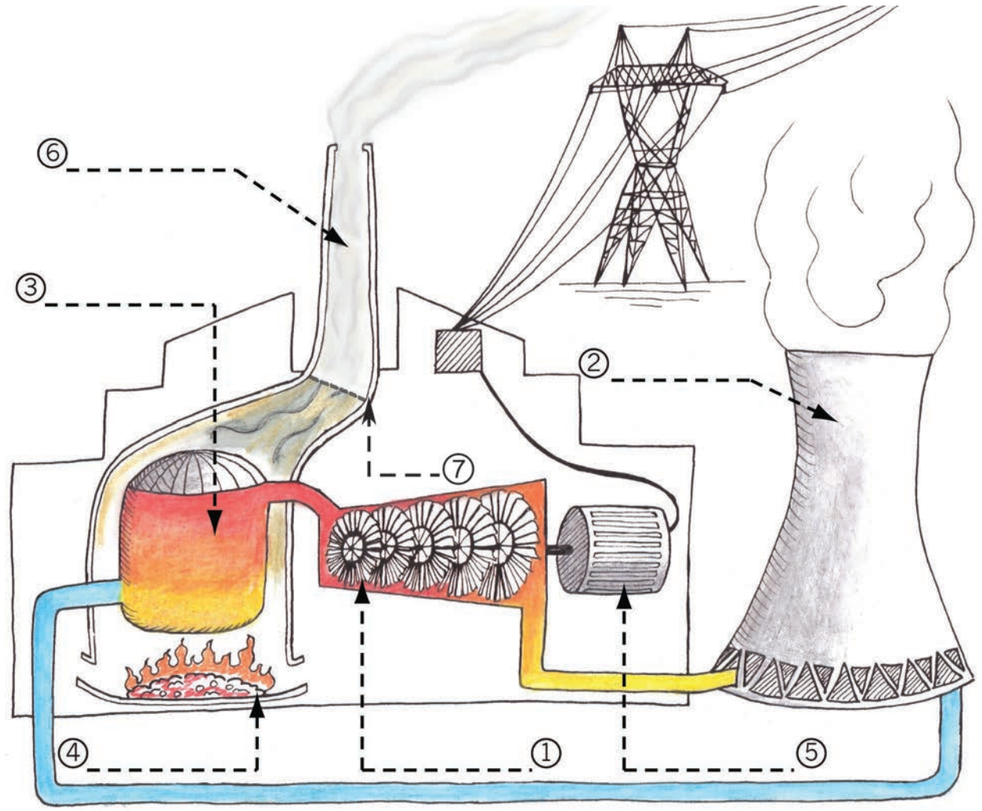

Figure 7

A coal-fired power plant has the following parts:

1. Turbine
2. Cooling tower
3. Boiler tank
4. Furnace
5. Generator
6. Chimney
7. Filter to remove ash and soot.

LB page 123

Investigate: The different parts of a power station

Which part of a power station is shown by which number on the picture in Figure 7? Use your pencil to write the names of the parts on the dashed lines next to the numbers on the picture. [3½]

How does electricity generation impact on the environment? (30 minutes)

Look at the picture below.

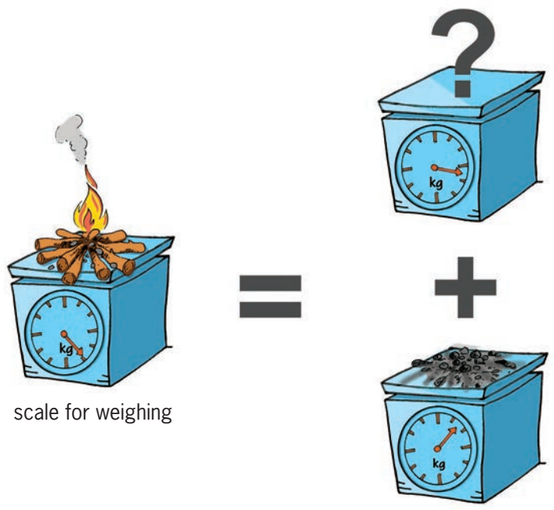

scale for weighing

Figure 8: Can mass disappear into nowhere?

The ash left at the end weighs much less than the wood from which the fire was made at the start. What happened to the rest of the weight?

The rest of the weight was converted to energy, fuelling the fire.

There are many different materials or substances that you can burn to create heat and light. Wood, coal, paraffin, gas and oil are some of the substances that you know about. They are called **fuels**. All of these fuels contain **carbon**.

Carbon is one of the main building blocks from which plants and animals are made. These building blocks are very small. It is impossible to see them. Carbon is a solid.

LB page 124

Carbon stores energy, like a battery. When carbon is on its own, you can say the battery is charged. When the carbon is **bonded** with another small building block called **oxygen**, then the battery is flat. Oxygen is a gas. When carbon is bonded to oxygen, they are together called **carbon dioxide**. Carbon dioxide is a gas.

Go outside on a very cold but sunny winter's day. Let the sunlight shine on your hand. Why does your hand start to feel warm, even though the air around it is very cold? It is because the sunlight is changed into heat, inside your skin. Light and heat are two different forms of energy. Movement and electricity are two other forms of energy.

When two very small building blocks of a material are close together, they stick together, as if they were glued with very strong glue. This is called **chemical bonding**. You will learn more about this later when you do chemistry in natural science.

When carbon bonds with oxygen, energy is released in the form of heat:

carbon + oxygen = carbon dioxide + energy.

This is what happens when an animal eats food that contains carbon and breathes air that contains oxygen. The carbon and oxygen combine inside the animal to give it energy and to make it grow. The same thing happens when plant material containing carbon burns in air.

To separate carbon and oxygen that is bonded, energy is needed. Plants separate carbon and oxygen by using the energy of sunlight:

carbon dioxide + light = carbon + oxygen.

Plants use the carbon to grow, because carbon is the main building block of plants. They release the oxygen back into the air.

The change of carbon into carbon dioxide and then back into carbon is called the **carbon cycle**. This is shown in the picture on the next page.

When you make a fire or burn gas or paraffin in your house, carbon dioxide is released into the air. When you use an electrical stove, no carbon dioxide is released from your house. But carbon dioxide is released from a power plant that makes the electricity you use.

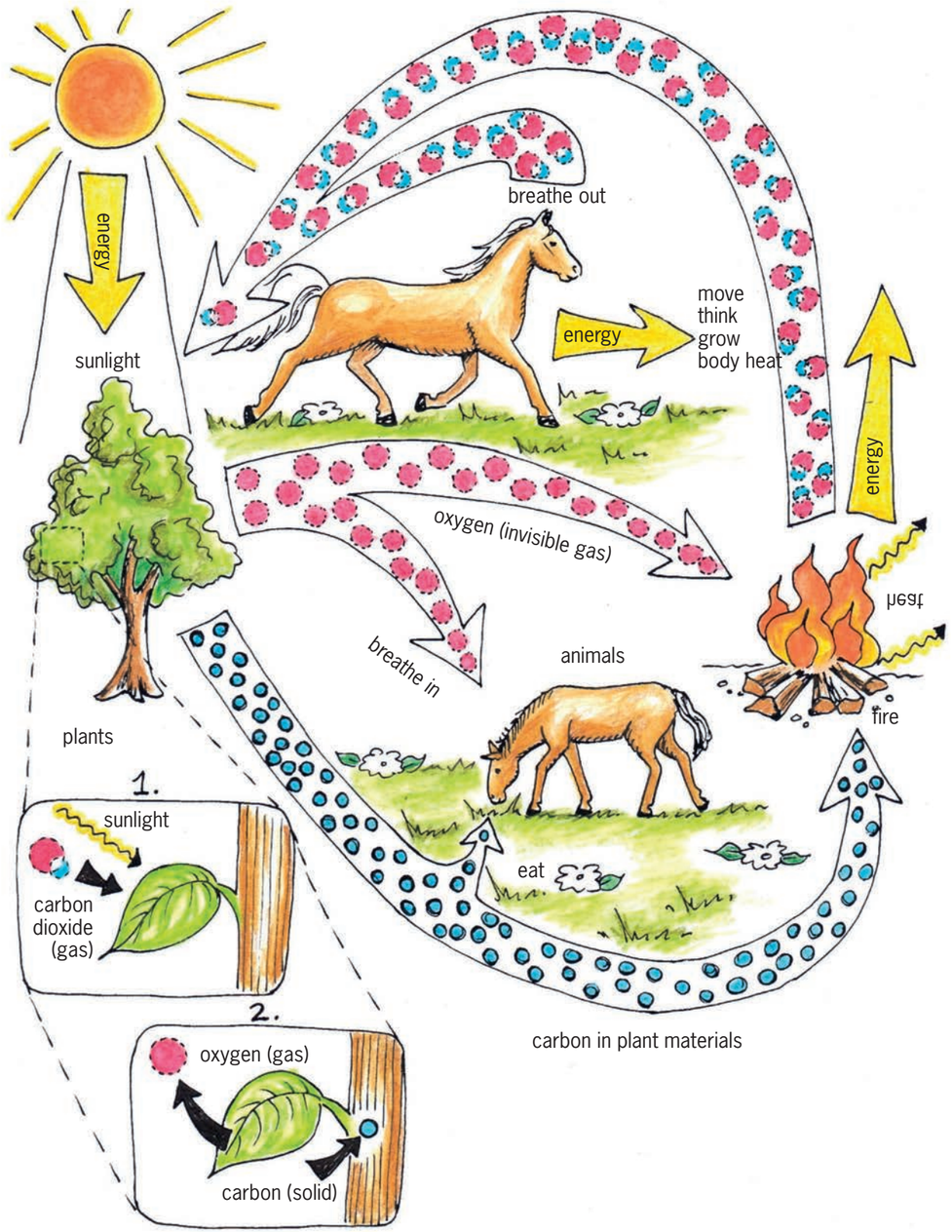

Figure 9: The carbon cycle

Investigate: Carbon dioxide

1. (a) What changes carbon dioxide gas back into carbon in a solid form? [1]

   Plants and trees

   (b) What does this solid carbon become part of? [1]

   Wood, leaves and stalks

2. Can you see carbon dioxide rising from a fire? [½]

   No. The smoke you can see is made up of ash and burnt carbon

3. People use fuel for light and heat. What else do they use fuel for? [1]

   Transport; manufacturing

On the right is a picture of a **greenhouse**. Greenhouses keep plants warm in winter, by using the energy of sunlight. It lets the energy of sunlight come inside, but does not let the same amount of energy go outside again. Therefore, it is warmer inside a greenhouse than outside. Greenhouses can be made from glass or plastic.

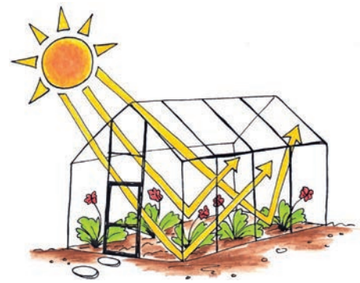

Figure 10

The layer of air around the earth is called the **atmosphere**. It is a little bit like the glass or plastic covering of a greenhouse. It lets the energy of sunlight in, but does not let the same amount of energy escape again. This is called the **greenhouse effect**. If this did not happen, it would be freezing cold every night!

When something is burnt, carbon dioxide is released into the air. Carbon dioxide is a gas that is very good at trapping the energy of sunlight. But only a small part of air is made of carbon dioxide. The more carbon dioxide is in the atmosphere, the more energy of sunlight is trapped, which means it will become warmer on earth. Many people are worried that the **climate is changing**, which can lead to droughts and storms.

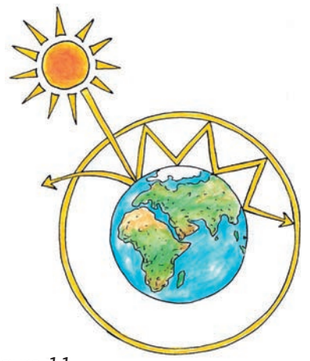

Figure 11

4. What would happen if the amount of carbon dioxide in the atmosphere increases? [1]

Carbon dioxide is a gas that traps the energy of sunlight. More carbon dioxide traps more energy, and it will become warmer on earth. This is known as the greenhouse effect.

[Total: 4½]

LB page 127

How can the negative impact of electricity generation be reduced? (60 minutes)

Later this year, you will learn about different kinds of power stations. Some of them release less or no carbon dioxide into the atmosphere. There is hope that in future, less electricity will be generated by coal-fired power stations. But most electricity is still generated by coal-fired power stations, and this is not going to change soon.

You will now discuss what the *users* of electricity can do to reduce the amount of carbon dioxide released into the atmosphere. Every time you switch on a kettle or another electrical appliance, you use electricity. The more electricity people use, the more electricity the power stations have to generate.

There is also a *hidden way of using electricity*. Every time you buy something that was made in a factory, the factory used electricity to make the product. If people bought less of those products, then the factories would be smaller and use less electricity.

Investigate: What can you do to release less carbon dioxide?

In this lesson, your teacher will lead the whole class in a discussion about how ordinary people can use less electricity, or burn less wood, gas or paraffin. The following questions will give you some ideas for your discussion:

1. When you make tea or coffee, how much water do you put into the kettle to boil? Do you put in more water than you need? Does the amount of water that you boil have an effect on how much electricity you consume? [1]

You should only boil enough water for your needs. The only extra water in a kettle is to cover the heating element. Yes, the more water you boil, the more electricity you consume.

2. When you leave a room, do you switch off the lights? Will that reduce the amount of electricity you use? [1]

You must switch off lights. It will reduce the amount of electricity you use.

3. Many houses have an electrical geyser to heat water. A geyser is a water tank that supplies hot water to taps. An electric element in a geyser heats the water, just like an electric element inside a kettle heats water.
Sarah takes a warm shower for five minutes every day. Nyiko takes a warm shower for 20 minutes every day. Does the time you take to shower have an effect on how much electricity you use? [1]

Yes, the longer you shower, the more hot water you use. This means that the geyser has to heat up a lot more water, which uses more electricity.

4. Look at the following cut-away picture of a geyser. Can something be changed or added to a geyser so that it will use less electricity? [1]

You can cover a geyser with a special insulating blanket to keep heat in. This means less electricity is used to keep the water hot.

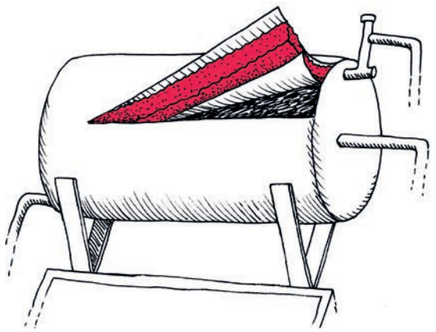

Figure 12

LB page 128





Figure 13: Some materials keep you warm. Why?

5. Thabo's family uses an electric heater to heat their house in winter. On the right is a photo of their roof from inside the house. Somebody told them that a lot of heat can escape through a roof. This means that a lot of the heat from the heater is wasted because it leaves through the roof. Can they change something to their house so that less heat will escape through the roof? [1]

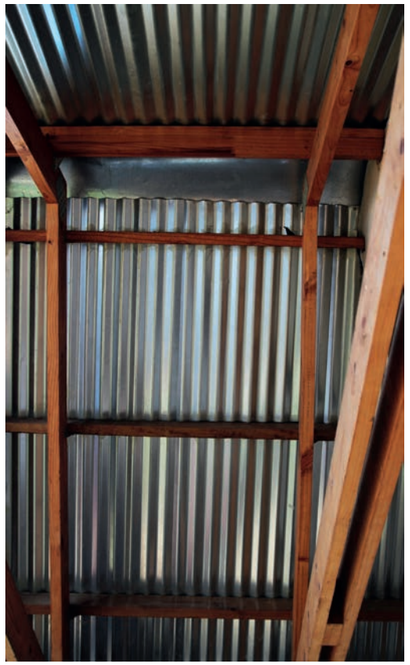

Figure 14

You can either line the roof with insulating material, or you can put in a ceiling, and line this with material.

6. Nabeelah's family live in a house without electricity. They use gas, candles and wood for heat and light. Katlego's family lives in a house with electricity. They only use electric lights and appliances. The two families are the same size. They both use about the same amount of light, hot water, and heat for cooking. Which family causes more carbon dioxide to be released into the atmosphere? [1]

Nabeelah's family causes more carbon dioxide to be released into the atmosphere at her house, but the electricity for Katlego's family causes carbon dioxide to be released into the atmosphere where it is generated. The families both causes the same amount of carbon dioxide to be released.

Total [6]

Something you could do at home

Below is one idea for using less electricity or fuel when cooking:

Bring the food to boiling point in a pot on the stove. Then take the pot off the stove and wrap it in a thick jacket to keep it very hot. Leave it there for two to three hours. The idea is the same as a person dressing very warmly on a cold day. To wrap a jacket around a pot to keep it warm is called **insulating** the pot.

The photo below shows an insulated cooking box that was used to cook rice. This box was made from waste materials. Before the towel was wrapped around it, the box felt slightly warm after the pot was put into it. That meant that heat was escaping from the pot. So an extra layer of insulation was added by wrapping a towel around the box. The towel was carefully wrapped around the box, so that it covered every part of the box. If some part of the box was not covered by the towel, heat could have escaped from that part of the box. It took two hours to cook the rice.

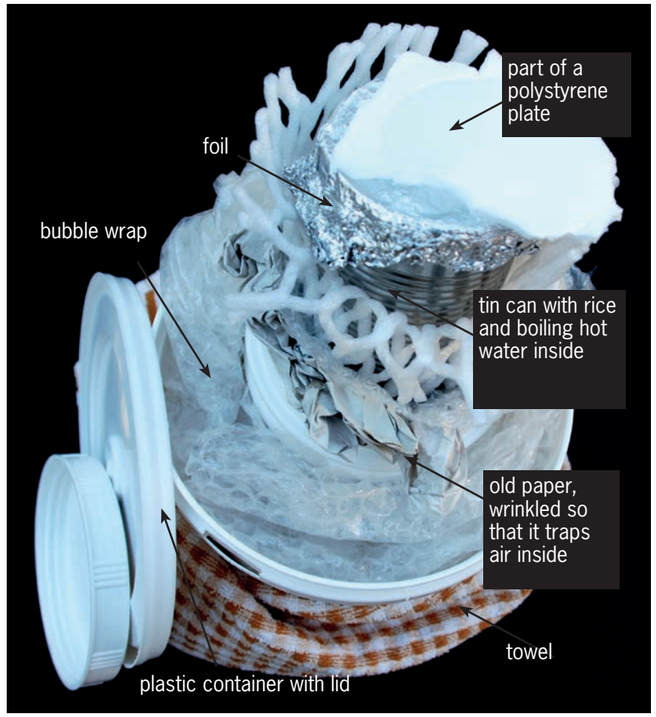

Figure 15: Insulated cooking box made of waste materials

Safety warnings

Boiling hot water can burn you!

If the food in the box is warm but not hot, and it stays in the box for more than an hour, bacteria can grow. That can cause food poisoning. To prevent this, make sure that the box is well insulated, and do not leave food in the box for more than three hours.

Week 2

LB page 130

Save energy by using less building materials

Factories use electricity or burn coal to make many building materials like cement and steel. You can say that there is an *energy cost* and a *carbon dioxide cost* to building materials.

Did you know?
About 9 kg of carbon dioxide is released into the air to manufacture 10 kg of cement or 10 kg of steel.

How can the amount of carbon dioxide that is released into the atmosphere be reduced? One way is to design things cleverly so that less material is needed to build them. Then the factories will make less material. Another way is to cut down fewer trees, because trees help to reduce the amount of carbon dioxide in the air.

This week, you will learn about three materials made in special shapes, or combined in special ways, so that a small amount of material can make a strong object. You will learn about reinforced concrete, plywood, and steel I-beams. But first, you will do revision about the different types of forces that can act on materials.

Forces acting on materials (30 minutes)

Revision questions

Look back on what you learnt in Chapter 1 to answer the following questions. If you find a question difficult, it can help you to first make a rough sketch of the situation. Your brain often works better if you can see the thing that you have to think about.

1. What forces can act on a tree trunk?

   Wind; weight of branches

2. What type of force acts on a column or pillar under a bridge?

   Compressive

3. What type of force acts on the chain of a bicycle?

   Tensile

4. Take your workbook and bend it as in the photo below. Make sure that the left and right sides of the book stay at right angles to the front and back of the book.



Figure 16

LB page 131

   (a) Why does the book make a "bubble" at the top when you bend it?

   It has been compressed

   (b) What does it feel like at the bottom of the book? Are the bottom pages loose or tight?

   Tight. They have been stretched tight with tensile force exerted.

5. Bolts and nuts are used to hold different pieces of material together, as shown in the picture on the right.
   What different types of forces can act on a bolt? Explain your answer or answers.

   Shear forces. The two pieces of material can pull or push in opposite directions, which places shear force on the bolt.

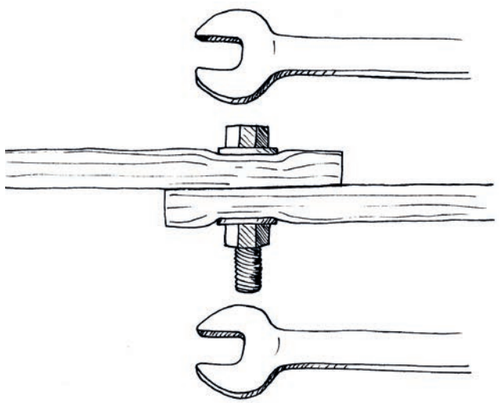

Figure 17

Reinforced concrete and plywood (30 minutes)

Reinforced concrete

Concrete is used in most modern structures and buildings. It can withstand very large compressive forces without breaking. But it cannot withstand large tensile forces. In most situations, concrete structural members like pillars and beams experience both compressive and tensile forces. To make concrete withstand large tensile forces too, steel rods or mesh is placed in the concrete when the wet concrete is poured into a shape or **mould**. Steel can withstand very large tensile forces. Concrete that has steel inside of it is called **reinforced concrete**.



Figure 18: Steel reinforcement is used to strengthen the concrete foundations of a new house.

LB page 132

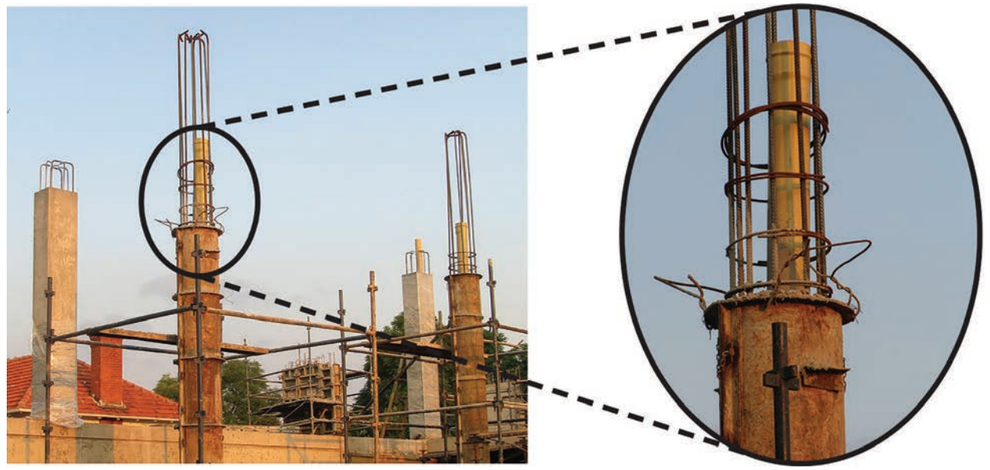

Figure 19: Steel reinforcement is placed inside a concrete pillar of a big building.



Figure 20: Steel reinforcement is placed inside a concrete wall of a big building.

Plywood

Wood is made of fibres that are arranged lengthwise in a tree trunk or branch. This arrangement is called the **grain** of the wood, and it can be seen as thin parallel lines.

Wood often cracks in the direction of its grain. This happens when a tensile force is applied *across* the direction of the grain.

Another way to say "across" the direction of the grain, is to say **at a right angle** with the direction of the grain.

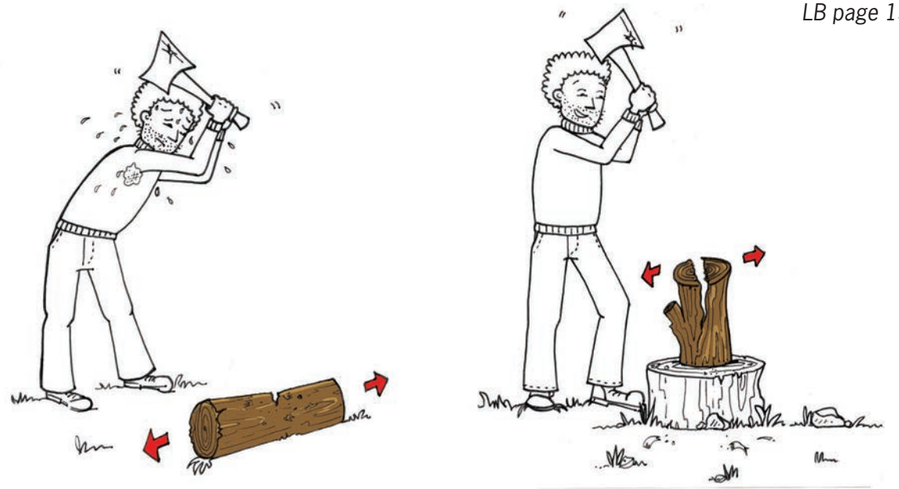

Figure 21: Splitting wood across the direction of the grain, or in the direction of the grain. Which is easiest?

Plywood is a made by glueing many thin layers of wood on top of one another. The grain in each layer is at a right angle to the grains in the layers above and below it. Plywood can therefore withstand large tensile forces in *both directions*.

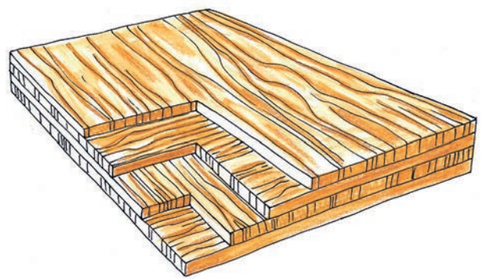

Figure 22: The different layers of plywood

Plywood is mostly used for shell structures that cover large surface areas, like floors. Other examples of the use of plywood are for seats and back rests of chairs, for table tops, and for skateboards.

A plywood shell structure is often supported by a frame structure underneath it.



Figure 23: A skateboard is made of plywood

Investigate: Properties of different materials

1. If a material is pulled in the directions of its length and its width using the same tensile force, will it stretch by the same amount in both directions?
   (a) The material of which a jersey is made:

   A jersey is made of wool and will stretch further widthways than lengthways.

   (b) The material of which a school shirt is made:

   A shirt is made of cotton and will stretch the same in both directions.

Look at the pictures below. A dry piece of wood cracks easily when you bend it, but the rubber sole of a shoe does not crack, even if you bend it a lot.

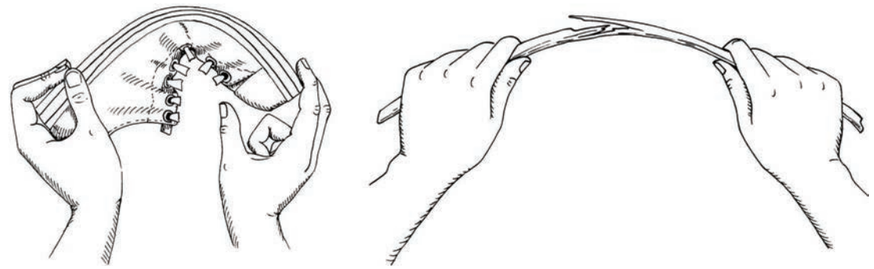

Figure 24

Rubber can change shape when it is pulled apart or pushed together. When you stop pushing or pulling it, it returns to its original shape. People say that rubber is an **elastic** material. Elastic bands are also made from rubber. When a tensile force is applied to an elastic rubber band, it gets longer. It also gets thinner.

Dry wood is only a little bit elastic, so it cannot get much longer when you apply a tensile force to it. Therefore, when the tensile force is too big, the wood will crack. You can also say the wood will **fracture**. Note that the wood cracks at the top or outside of the bend, and not on the inside.

LB page 135

Steel I-beams (60 minutes)

Metal beams can be shaped in special ways to make them resist bending. The shape called an I-beam is a shape that resists bending very well.



Figure 25: Steel I-beams are often used in buildings. Wood I-beams are often used during the construction of a building, but are removed once the building can support its own weight.

LB page 136

The pictures below compare the resistance to bending of an I-beam, to the resistance to bending of a rectangular-shaped beam. Both beams have the same length between the two supports. And the load is the same on both beams.

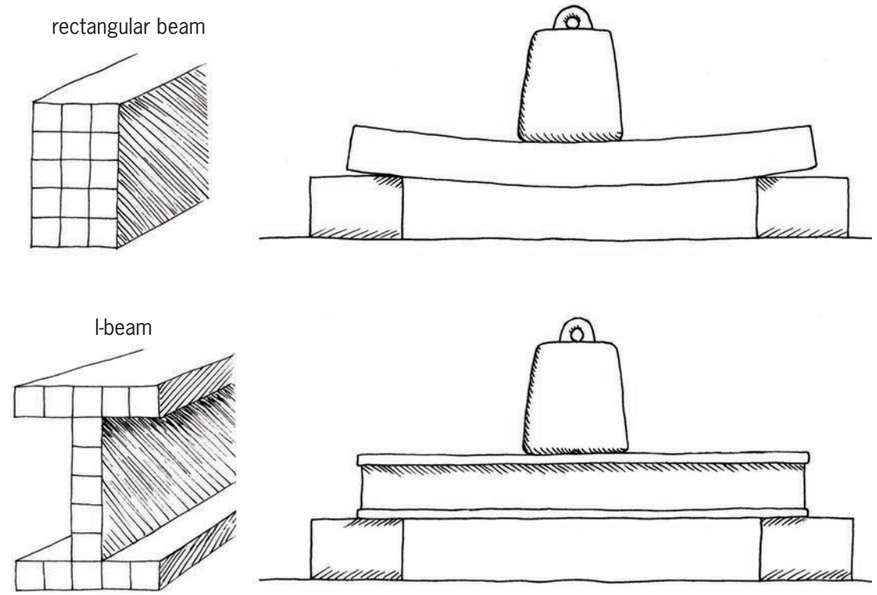

Figure 26

Count the blocks inside the pictures of the shapes of both beams. You will see that both beams are made from the same amount of material. That means that the weight of both beams are the same, and the cost of the material will be the same. Which beam bends the most under the weight of the load?

Because an I-beam resists bending better, a lighter and cheaper I-beam can be used to carry the same load as a rectangular beam. That also means that less steel will have to be made, so less energy will be used to make steel. In this way, clever design of material helps to reduce the negative impact of technology on the environment.

In the rest of the lesson, you will investigate *why* an I-beam resists bending better than a rectangular beam of the same weight. First, you have to understand what forces act at different places in a beam when it is bending.

Investigate: What forces act inside a beam that bends?

In the picture on the right, the dry piece of wood fractures at the top of the bend. That means there is a tensile force acting along the top of the wood. But the wood is only bent, so how can there be a tensile force acting on it?

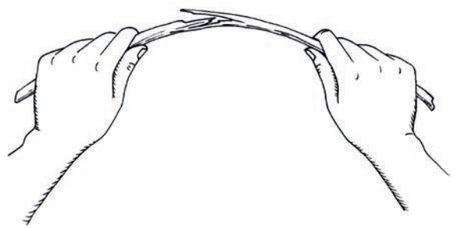

Figure 27

The pictures below will help you to understand what happens to a beam that bends. The pictures do not show what the material of which the beam is made of actually looks like. Instead, the pictures show an imagined idea that wood is made of a lot of little blocks that are connected by springs.

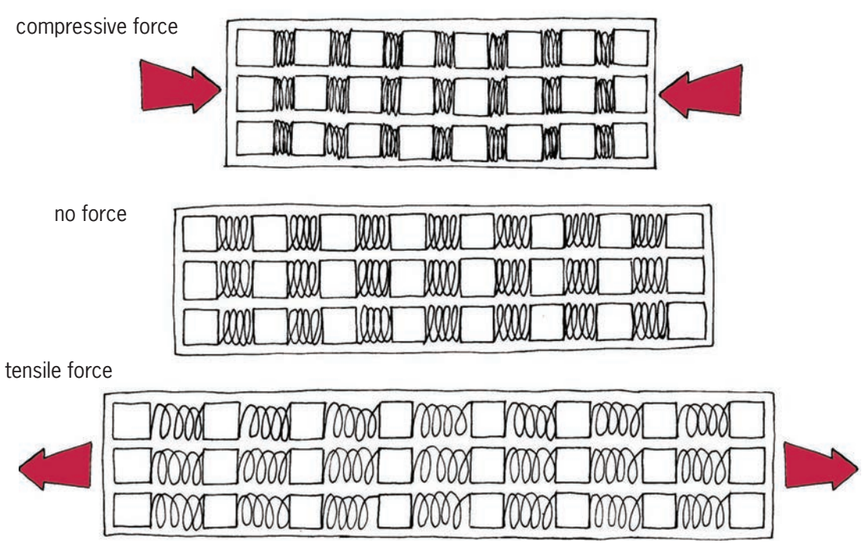

Figure 28: Pictures of a wooden beam as if it is made of small blocks connected by springs.

1. What happens to the imaginary springs when a tensile force acts along the length of the beam?

   The springs will stretch equally across the beam.

2. What happens to the imaginary springs when a compressive force acts along the length of the beam?

   The springs will compress equally across the beam.

Below are pictures of a thin and a thick beam. Each beam bends when a load is applied in the middle of it. The pictures are drawn *as if* the beams are made up of many small blocks connected by springs.

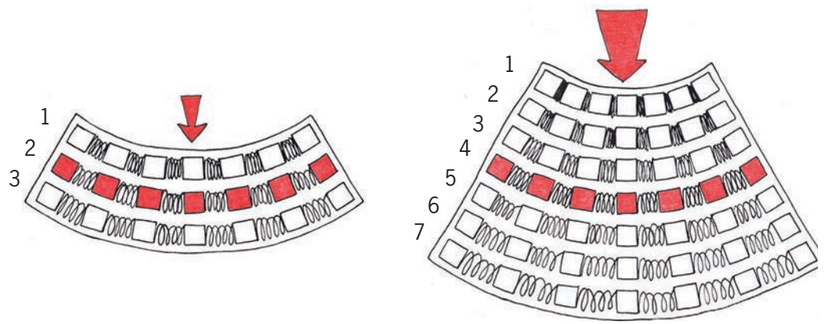

Figure 29

When a beam bends down, the following happens:

- The top gets shorter. It is compressed.
- The bottom gets longer. It is stretched.
- The middle stays the same length.

3. What type of force acts along the top of the beam when it bends down?

   Compressive force

4. What type of force acts along the bottom of the beam when it bends down?

   Tensile force

5. Is there a tensile or compressive force acting along the middle of the beam when it bends down?

   No force

How does a spring work?

- The shorter you want to make a spring, the harder you have to press it.
- The longer you want to make a spring, the harder you have to pull it.

6. Look at the thick beam on Figure 29. There are seven rows or layers of blocks connected with springs. The layers are numbered.
   (a) Which two layers of the beam help it the most to resist bending?

   Row 1 and 7

   (b) Does the middle layer of a beam help it to resist bending?

   No

LB page 139

7. Look at beam A and beam B below. They are both made of the same amount of material. You can count the blocks to check this.

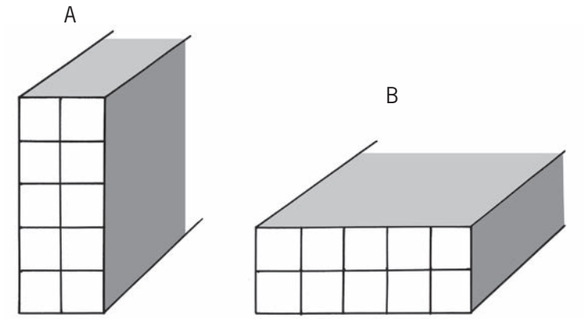

Figure 30

Which beam will bend the least if the same load is applied to both beams?

Beam A will bend the least.

8. Compare beam C on the right to beams A and B. Will beam C resist bending better than beam B?

   Yes, beam C will resist better than beam B if the weight pushes directly downwards.

Beam C will resist bending the best when the force is acting *exactly* downwards. But if there is only a very small sideways force, beam C will **buckle** because it is so thin.

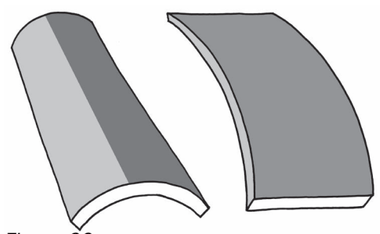

Figure 32

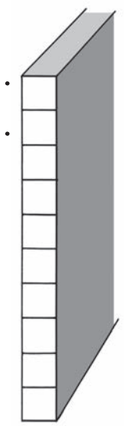

Figure 31

LB page 140

Engineers wanted to design a new shape for a beam that will resist bending more than beam B, but without buckling like beam C. They knew that the material in the middle of a beam does help a lot to resist bending, because it does not stretch or compress a lot in the middle of a beam when it bends. Figure 33 explains this.

So they took the design of beam B, and removed some material from the middle and rather added it to the top and bottom, where there will be more stretching and compression. In this way, they made the beam taller, but they also added short horizontal parts at the top and the bottom to prevent the beam from buckling sideways. This is shown in the pictures below.

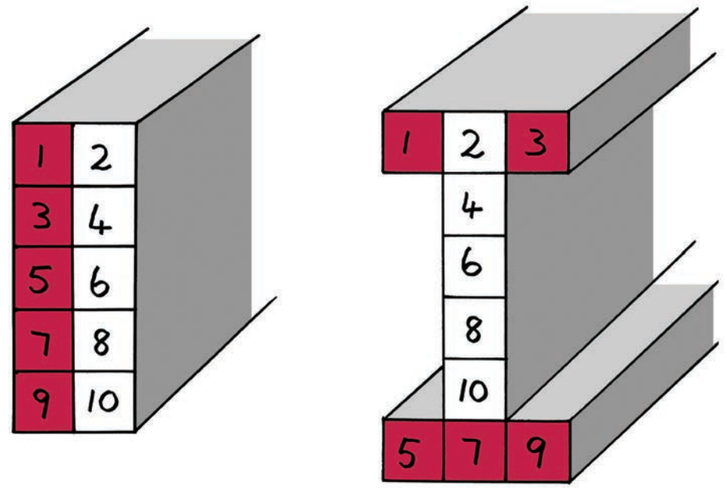

Figure 33

9. Why does an I-beam resist bending better than a rectangular beam made from the same amount of material?
   Your answers to the previous questions will help you.

   The I-beam has a thicker layer of material underneath the load. In this example, 6 squares in the I-Beam to 5 squares in the rectangular beam.

[Total: 6]

Week 3

LB page 141

Build a model of a house

A lot of electricity or fuel is used to heat a building when it's cold, or to cool it when it's hot.

This week, you will build a cardboard model of a house from the plans you will be given. Then you will design and make changes to the house so that it will need less heating in summer, and less cooling in winter.

Some of the changes you will make will be *inside* the house, and others will be *outside*. You will build a model of only one half of a house, as if the house has been cut open along the length of the roof. This will make it easy to work inside the small cardboard house to make changes to it. It will also make it easy for other people to see the changes you have made.

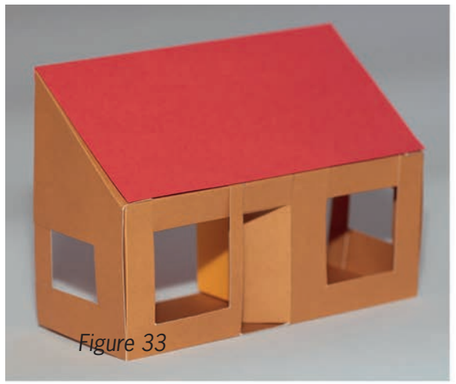

Figure 33







Figure 34

LB page 142

Build a model of a house: Individual work (60 minutes)

The photo below shows the **developments** for different parts of the cardboard model that you will build. The walls and the floor are made out of one piece of cardboard. The roof and the inside wall of the house are made of two other pieces of cardboard. There are also thin strips of cardboard that will close the places where the windows are cut out and the door is cut open.

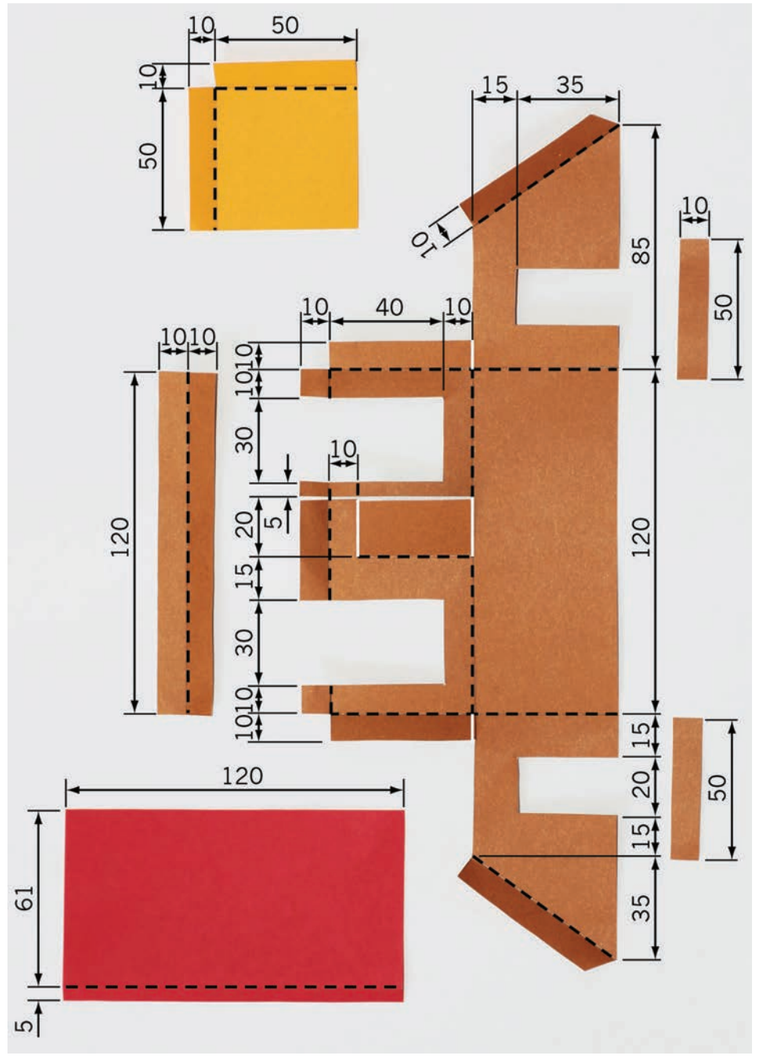

Figure 35: Dashed lines show where you should fold the cardboard.

You will make your model out of thin cardboard. To save time, do not make roof trusses for your model.

You could use some old cereal boxes for cardboard. You will later cut out, fold and glue together your model. But first do the following things:

LB page 143

1. Make accurate drawings of the developments of the different parts your model. Make these drawings on cardboard.
2. Cut out and fold the developments of the different parts of your model.
3. Glue the small strips of cardboard to the walls, to close the spaces where the windows were cut out and the door was cut open.

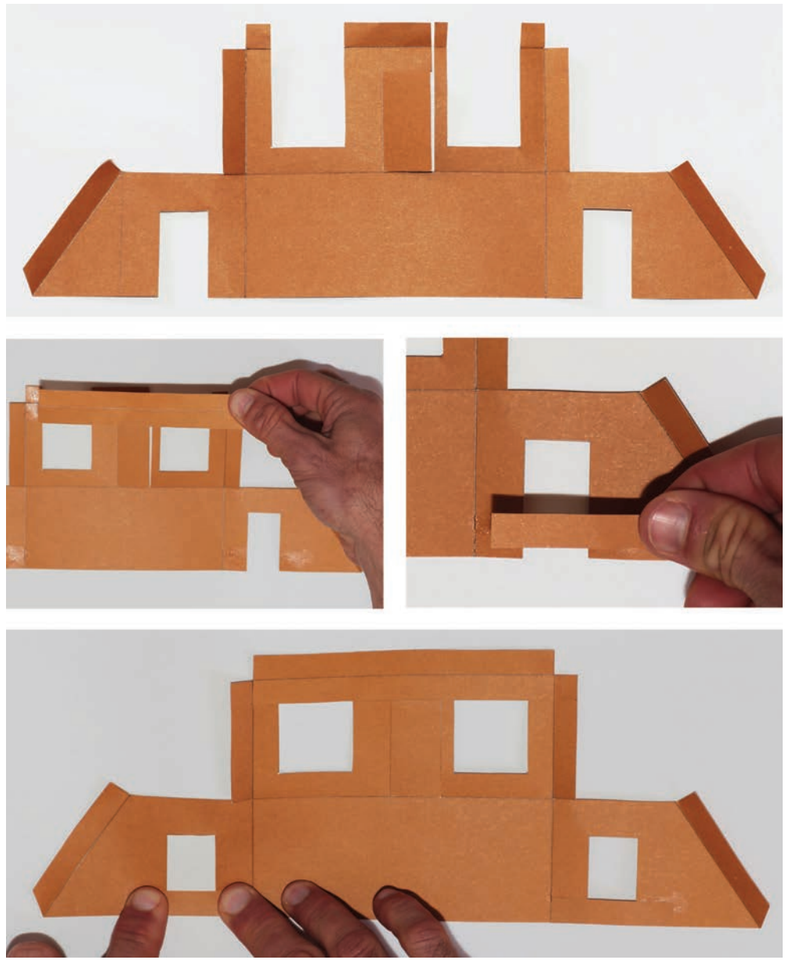

Figure 36

4. Fold the walls, and use Prestik to join them together. Then add the roof and the inside wall, also using Prestik. Have another look at Figure 36 if you are not sure how to do this.

   Do not use glue from now on. Rather use Prestik, because you might want to take out the inside wall, remove the roof, or fold the walls down later. After you have made the changes, you can put the walls and roof back with Prestik.

[Total: 5]

LB page 144

How do you know when heat is escaping?

Look at the pictures below. The same pot full of hot food is shown on the left and on the right. On the left, somebody tries to pick up the pot and burns his hands. On the right, somebody puts a bag filled with straw around the pot, and then picks up the pot without burning his hands. You can say the hot pot on the right is **insulated** by the straw bag.

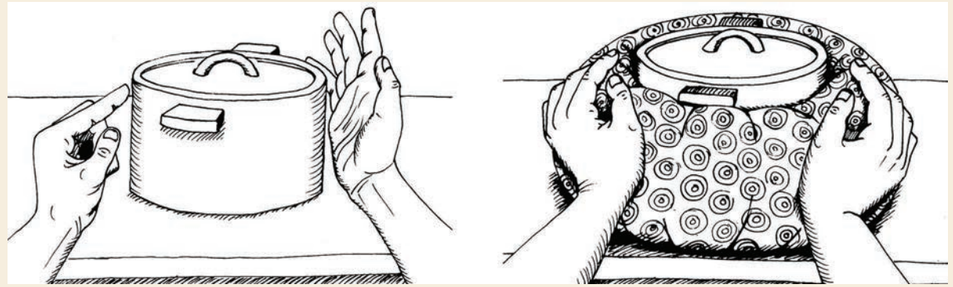

Figure 37: A hot pot with and without insulation

When you touch an object and feel that it is hot, it means that heat is escaping from the object. So the heat moves from the object to you. You are getting warmer and the object is getting cooler.

When you touch an object and it does *not* feel hot, it means that heat is not moving from the object to you.

You can feel the heat of the pot on the left, which means that heat is escaping from that pot. Therefore, the pot will cool down.

You cannot feel the heat of the pot on the right with the straw bag around it. That means heat is not escaping from that pot, or it is escaping very slowly. So the pot on the right will stay warmer for much longer than the pot on the left.

Team meeting on how to improve a house (30 minutes)

Design: How to improve a house to use less energy

Think of ideas to improve a house so that it will use less electricity and/or fuel. The questions below can help you. Working as a team will also help you, but you should still write down your own ideas. Your teacher will assess your ideas.

Try to think of changes to a house that will be cheap and easy to make. Maybe you can use recycled or natural materials, or even plants.

1. What can be changed about the roof design so that sunlight will not come through the windows in the middle of summer, but will come through the windows in winter? Make a rough sketch of your design. [2]

Overhanging awning.

Trees planted to shelter the house

2. How can you prevent heat from escaping through the roof when it is cold outside? Make a rough sketch of your design. [2]

A ceiling.

Insulation.

LB page 145

3. The owners of a house want to put in a small fireplace, like the one on the right, to heat the house in winter.
   (a) Where in the house should they put the fireplace and its chimney? Show the position of the fireplace on the **floor plan** you drew. A floor plan is what you see when the roof is off and you look at the house from the top.
   Hint: You want as much of the heat from the fireplace to stay inside the house. You do not want heat to escape to the outside. [1]

   Hint: Read the part in the coloured box on page 172 (Learner Book page 144) about the insulated pot.

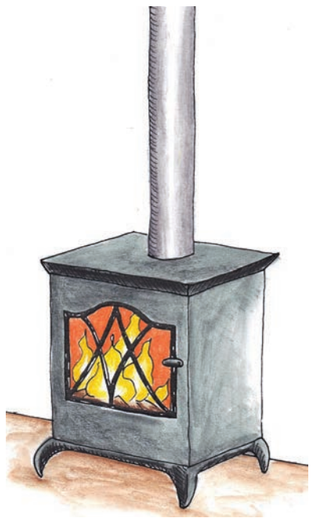

Figure 38

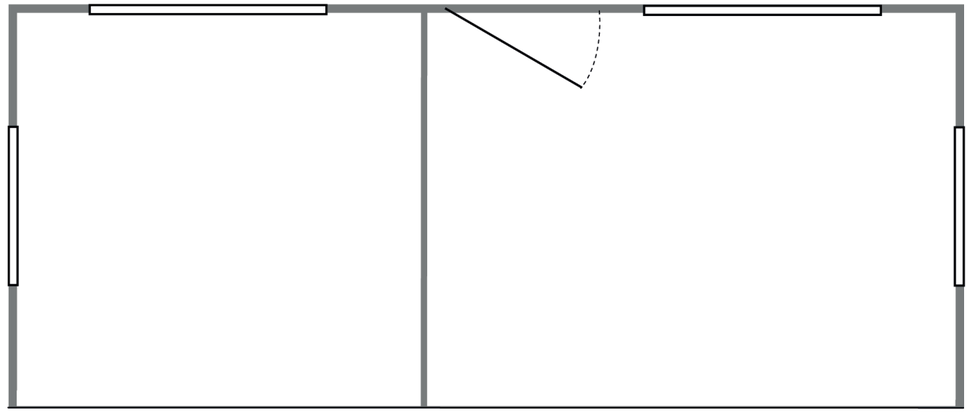

Figure 39: Floor plan of your model house

(b) Why would you put the fireplace there? [1]

It must be placed next to an inside wall. (Either room.) As little heat as possible must radiate out/escape through an outer wall.

LB page 146

4. Three different people cook soup on a gas stove in different ways, as shown below.

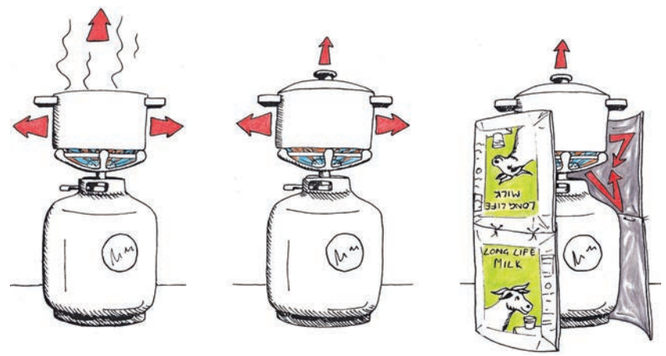

Figure 40

Who will use the least amount of gas to cook the soup? Explain your answer. [2]

The person on the right who has insulated the pot will use the least amount of gas.

5. Have another look at the previous two chapters. Do any of the pictures give you other ideas on how to improve a house to save energy? [2]

Let the learners check through the chapters and share their ideas before writing them down.

[Total: 10]

Drawing your planned improvements to the house (30 minutes)

Make: Isometric projection drawing of your planned improvements

1. Make a freehand sketch in 3D to show what you plan to add or change to the **outside** of the house. Your sketch should show what you would see if you were sitting in a tree on the front, left side of the house. One of the photos in Figure 34 shows this view of the house.

   Add labels and notes to your sketch to explain the improvements.

   Your teacher will look at the following to give you marks:

- You have shown at least one improvement on the outside of the house. [1]
- The improvements will really reduce how much energy the house will use, and it will be cheap and easy to make the improvements in real life. [2]
- It is easy for someone else to understand what you have sketched. [2]
- The labels and notes explain the improvements well. [2]

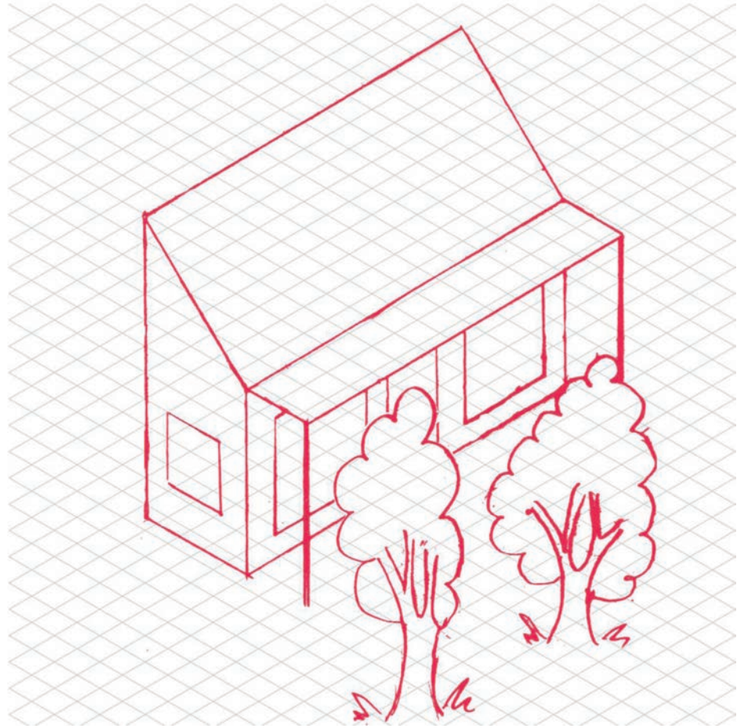

2. Make an isometric projection drawing to show your planned improvements to the **outside** of the house. Your drawing should again show what you would see if you were sitting in a tree on the front left side of the house.

   Do not show any hidden details.

Your teacher will look at the following aspects of the drawing to give you marks:

- It has an appropriate heading. [1]
- It is made from the correct viewing point. [2]
- It shows all the improvements shown in your sketch. [1]
- It shows all the visible lines of the house. [1]
- It shows all vertical lines as vertical and all horizontal lines at 30˚. [2]
- It is neat. [1]

[Total: 15]

Isometric drawing of improvements: Awning, trees.

Homework

1. Ask your grandparents or old people in your community for advice. Tell them:

   "I want to learn how to make changes to a house so that it will use less electricity or fuel for heating in winter, and less electricity for cooling in summer. Please tell me more about changes that are cheap and easy to make."

   Write down their advice. You can also make sketches.

Learner's own answers.

2. Gather materials that you can use to improve your model house, and bring it to school next week. Some waste materials will work well. You do not have to use the same materials on the model that you would use in real life. Also bring a piece of corrugated cardboard that is at least as big as an A4 sheet.

   If you do not bring these materials, you will not be able to show the improvements on your model house.

Week 4

Make improvements to your model house (60 minutes)

Make: Improve your model house

Individual work

You want to show other people the different improvements that can be made to the house, so that less energy will be needed to heat or cool the house. Some improvements may be on the outside of the house. Other improvements may be on the inside of the house. Some things may even be added on the ground around the house.

Stick your model of a house on a big flat piece of cardboard using Prestik. The flat piece of cardboard represents the ground around the house.

Now add or change things to the house so that it will use less energy. Use the materials you brought from home to make the changes.

For each thing that you add or change to the model, make a small paper sticker with a number on it, and stick it to the thing that you add or change. Write down the numbers of all the changes on a piece of paper. For each change, say what its purpose is and what it is made of. If you know the name of the thing, you can also write it down. For example:

1. What is it made of in real life?
   What is its purpose?
   What is its name?

This piece of paper is called a **legend**. It explains to people what the different things on your model are.

[Total: 20]

Evaluate your improvements to the house (60 minutes)

You will make an evaluation sheet to evaluate your own work, as well as the work of two other learners who are *not* on the same team as you.

Evaluate each model **objectively** and fairly. So you should pretend that you are evaluating the work of someone that you do not know. Do not give high marks to yourself or others if the improvements to the house are not good or not enough. Be prepared to explain why you gave a low, medium or high mark.

Evaluate: Make and use an evaluation sheet

LB page 149

1. Change each of the following **criteria** into a question. Then make a table with all the questions. You will give a mark next to each question, from one to three.
   - There should be at least two improvements on the inside of the house. The more improvements there are, the better. But ignore changes to the model house that will not reduce the amount of energy used.
   - There should be at least one improvement on the outside of the house. The more improvements there are, the better. Ignore changes that will not work.
   - The improvements should be as cheap as possible, and easy to make in real life. They should not require a lot of extra building to be done.
   - It will be good if some of the improvements are made with natural materials that can be found close by, or by re-using waste material.
   - The improvements on the model should be neat. It should be easy to understand what the improvements are just by looking at the model.
   - The legend should give a clear explanation of what the improvements are.

Week 5

Present your model of a low-energy house

Your team will give a presentation of your improvements to a house later this week. The presentation should be between three and five minutes long. Each member of your team should do a part of the presentation. The other learners in the class can ask you questions after your presentation.

Prepare your presentation (30 minutes)

Team meeting

1. Decide which part of the presentation each one of you will do.
   - One of you should talk about the rough sketches, and the final isometric projection drawing you made.
   - One of you should show a model and explain all the changes inside and outside the model.
   - One of you should talk about the advice that old people gave you on how to improve a house to save energy. You should also talk about how natural materials can be used to improve a house.
   - If there is a fourth person in your group, he or she should talk about the first plans you made during your team meeting in week three, and how you improved or added to those plans later on.

LB page 150

2. Decide in what order you will give the different parts of the presentation. Who will talk first, and who will talk next?
   Write the parts of the presentation in the order that you will do them, and show who will do which part.

Individual work

1. Plan your own part of the presentation.
   Write notes about what you will do.
2. **Homework:** Practise your presentation.

Hints for presenting your work

- Stand up straight and look at the class when you speak.
- Do not write out everything that you will say. Rather make a list of the main things you will talk about. This should not be more than five things. Your list should not have full sentences, but only key words to remind you of what you want to talk about.
- What you are telling the class is very important, because it can help people save money and reduce the negative impact on the environment. Be proud of what you tell the class and speak loudly and clearly.
- Use your sketches, drawings and model to point to things while you are talking. This will help the class to understand what you are saying. Make sure they can see the sketches, drawings and model clearly.
- You can also bring pictures from magazines or newspapers, or examples of materials, and use that in your presentation.
- Know when it is your turn to speak.
- Keep to the time limit. It often helps to ask somebody else in the class to hold up cards saying how much time you have left.

Presentations of all the teams to the class (90 minutes)

Listen well to the presentations of the other teams. They may have interesting ideas that you did not think of. Write those ideas down below, to help you to remember them when you design or improve your own house one day.

Next term

Enjoy your winter holiday! After the holiday, you will make things that work with levers and gears.

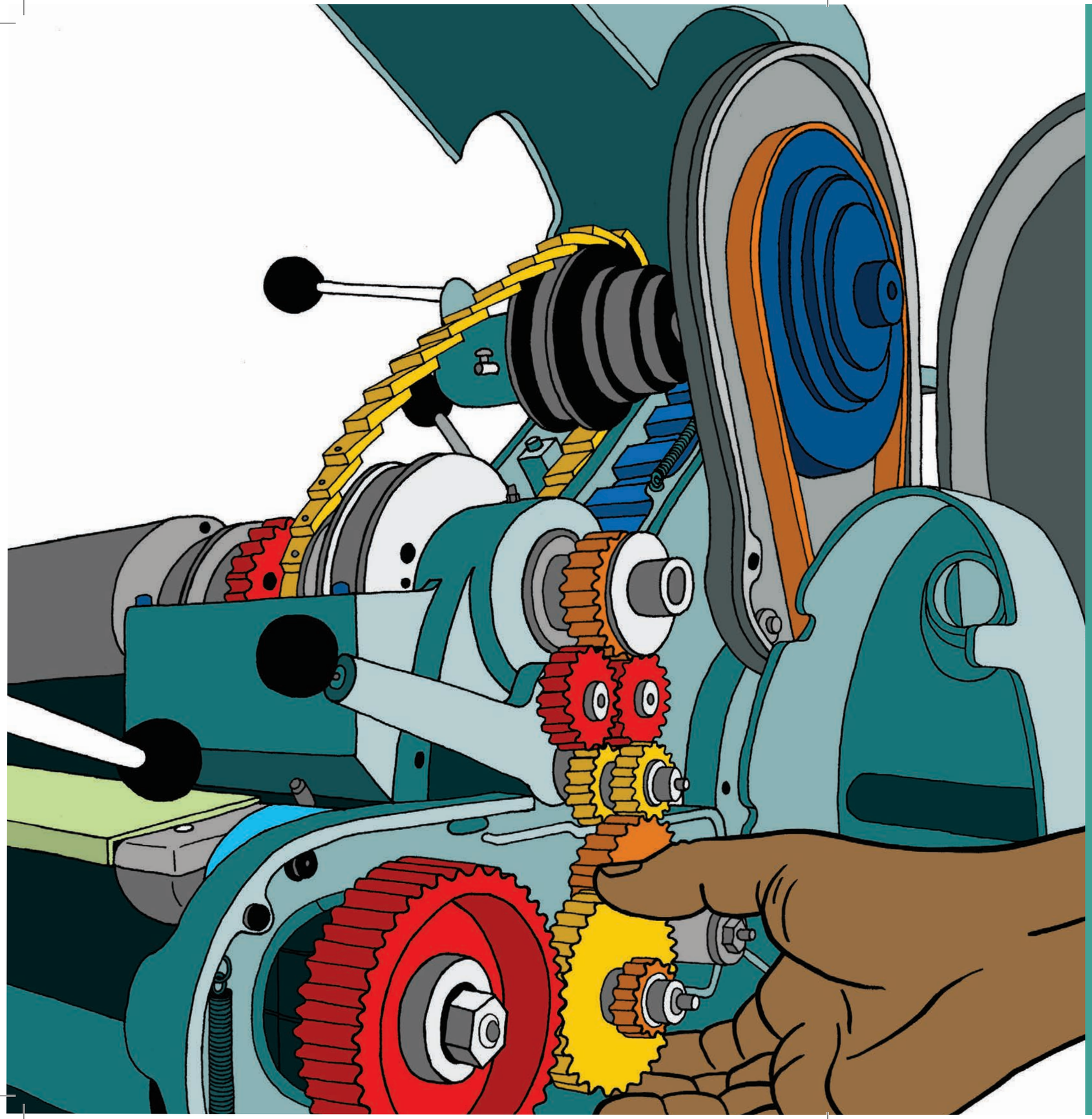

Terms 3 and 4

TERM 3

CHAPTER 11

Levers, linkages and gears

LB page 151

In this chapter, you will revise what you learnt in Grade 7 about different types of levers and linked levers. You will pay special attention to whether a lever or a system of levers gives a mechanical advantage or a distance advantage.

You will also revise what you learnt earlier this year about how gear systems can give a mechanical advantage or a speed advantage. Then you will learn about a type of gear called a bevel gear. Bevel gears change the direction of rotation.

It is important that you understand mechanical advantage very well, because you will be doing calculations about mechanical advantage in the next chapter.

11.1 Revision of levers and mechanical advantage 184
11.2 Linked levers 190
11.3 Gear systems 195

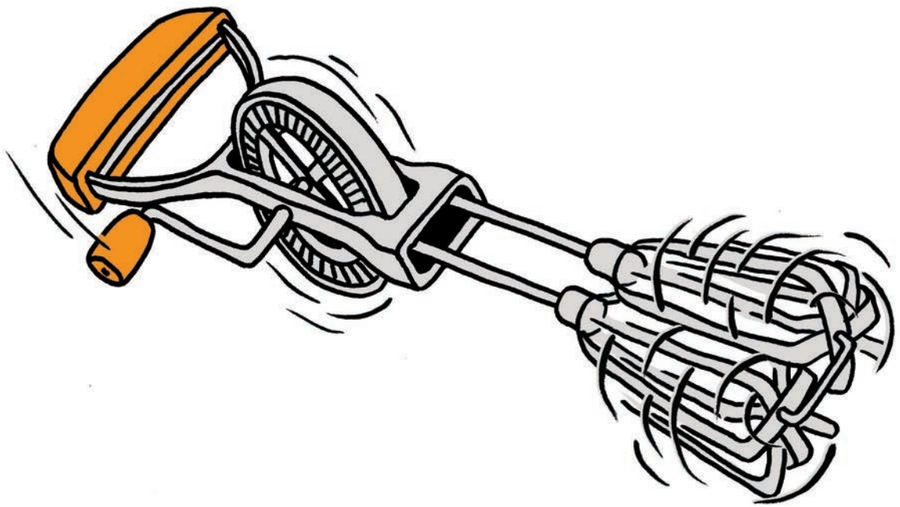

Figure 1: Gears are sometimes used to get a speed advantage.

11.1 Revision of levers and mechanical advantage

Learners revise what they learnt in Grade 7 about levers being able to give a mechanical advantage or a distance advantage.

In Grade 7 Term 1 (Chapters 4 to 6), learners explored how there is a trade-off between distance and force when using a lever. They learnt that the term 'mechanical advantage' is used to describe this trade-off in a quantitative/measurable way. If the distance moved on the output side is more than the distance moved on the input side, then the force on the output side will be smaller than the force on the input side, and the other way around.

They learnt to classify mechanical advantage as:

- MA > 1 (output force > input force, a mechanical advantage), or
- MA = 0 (output force = input force, no mechanical advantage), or
- MA < 1 (output force < input force, a distance advantage).

They learnt the following by means of practical investigation:

When the distance between the effort (input force) of a lever and the fulcrum is bigger than the distance between the load (output force) and the fulcrum, then there is a mechanical advantage.

The activities and questions in this section help learners to remember all of the above. They also, for the first time, read a formula for calculating the exact value of the mechanical advantage. This formula calculates the ratio between the output force and the input force. They are shown examples of how this formula is used, but they do not yet do calculations themselves (that happens in the next chapter).

They also learn of different ways in which the value of this ratio (the mechanical advantage) can be written, and that these different ways of writing the ratio means the same thing (are 'equivalent').

You can help the learners make more connections with related things that they have already learnt:

- In Grade 7 Term 1 Chapter 7 (see p. 75), learners explored "swap distance for strength" in a hydraulic system.
- In Grade 7 Term 3 Chapter 15 (section 15.2), they learnt how in pulley systems, the output force is bigger than the input force if the output distance is smaller than the input distance.

11.2 Linked levers

In this section, learners compare the distances of the input and the output to the fulcrum, when answering questions about the mechanical advantage of different levers. In this way, they develop intuitive understanding to prepare them for the formula to calculate mechanical advantage as the ratio between the input distance and the output distance, which is given in the next chapter.

They also investigate the example of bolt cutters, where two sets of levers are combined to get a very big overall mechanical advantage. Each set of levers give a mechanical advantage. When linked together, the whole system gives an even bigger mechanical advantage.

(The mechanical advantage of a system of linked levers is actually the MA of the first set of levers, multiplied by the MA of the second set of levers, but learners do not need to learn that.)

When investigating the system of linked levers in the bolt cutters, it is important that learners understand that not all pivot points act as fulcrums of levers. Some pivot points (which are not fixed/supported – in other words can move freely) merely serve to connect pieces together in a way that allow the pieces to rotate.

11.3 Gear systems

In this section, learners answer questions to remember what they learnt about gear systems in Term 1 Chapter 5. Many words are needed to describe gear systems. Learners will become more comfortable and fluent in talking about:

- input and output rotational speeds,
- input and output turning force,
- gear ratio,
- direction of turning,
- idler gears,
- counter rotation, and
- synchronised rotation.

The questions are easy and do not require any use of the formula for gear ratio (that is only done in the next chapter). However, it is important that learners understand and use the words above correctly and easily. Therefore, you should give learners opportunity to talk about gear systems using these words.

Right at the end of this section, learners are briefly introduced to bevel gears. You should bring a hand drill and/or an eggbeater with bevel gears to class, so that learners can see how bevel gears work. Not all learners have such devices at home.

LB page 152

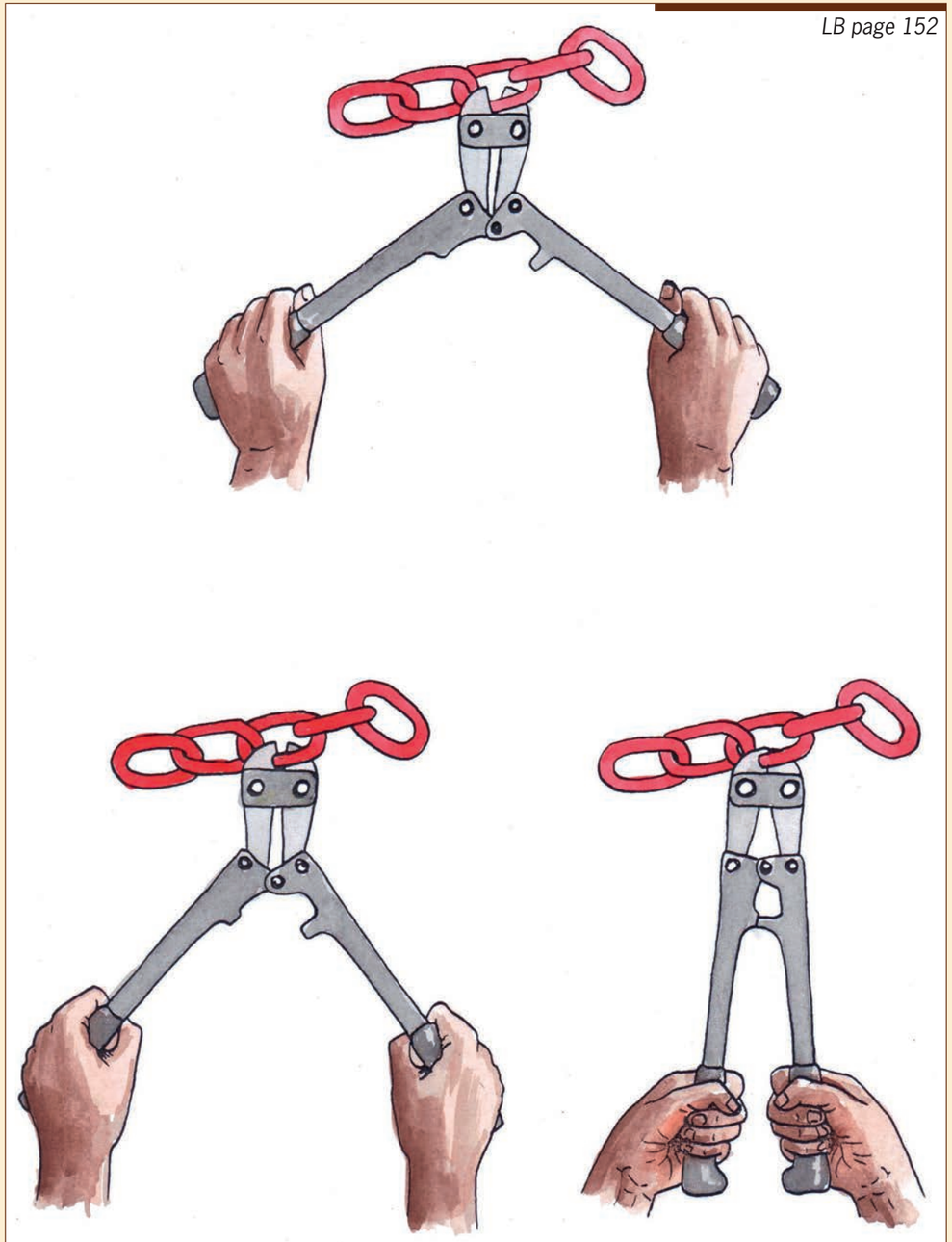

Figure 2: A bolt cutter uses a system of linked levers to give a very big mechanical advantage. Note that there are five fulcrums!

LB page 153

11.1 Revision of levers and mechanical advantage

Mechanisms are parts of machines that help us to move things. Machines are usually made of many connected mechanisms. Some parts of a mechanism move, and other parts are used to hold the moving parts in place.

Mechanisms are useful because they help us to move things further, faster or by using less force.

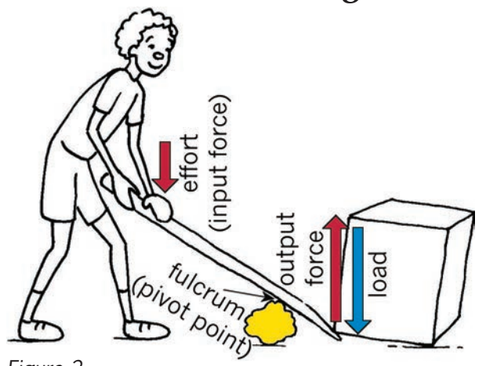

Figure 3

Machines at home LB p. 153

Figures 4 to 7 show machines that you might have at home. Write down what each of these machines is used for, and how they make it easier to do the task.

1. A bottle opener

   This helps you to remove a steel bottle cap by bending the cap. The length of the bottle opener gives you mechanical advantage, which means you only have to apply a small force to bend the cap.

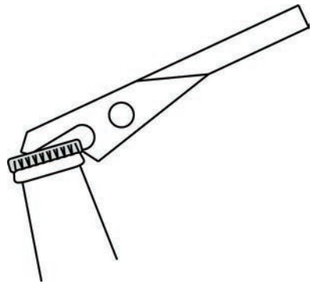

Figure 4: A bottle opener

2. A pair of scissors

   This helps you to cut paper. A cutting knife will also cut paper, but it will cut the table surface underneath the paper as well. With scissors, the surface underneath the paper is not damaged. In fact, you can hold the paper in the air while you cut it.

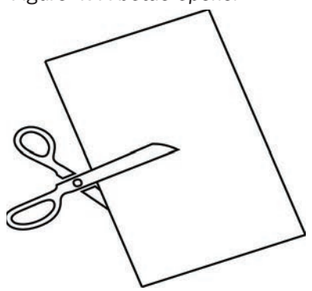

Figure 5: A pair of scissors

3. A hammer

   In Figure 6, a claw hammer is used to pull a nail from a piece of wood. The long handle of the hammer gives you a big mechanical advantage, so that you only have to apply a small force on the tip of the handle for the claw of the hammer to pull out the nail with a big force. Also, the rounded shape of the claw means that the nail is pulled out smoothly.

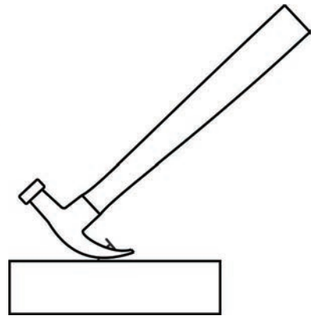

Figure 6: A hammer

4. A pair of pliers

   A pair of pliers helps you to bend and cut wire without using much force. Because of the long handles, it also gives a mechanical advantage.

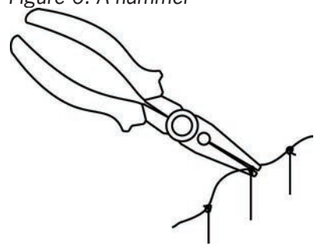

Figure 7: A pair of pliers

Levers allow you to change the direction of movement, the size of movement and the amount of input force that is needed for the output movement to happen.

LB page 154

Do you remember what mechanical advantage is?

You already know that:

- If the input force is smaller than the output force, there is a mechanical advantage. You can say the mechanical advantage is bigger than 1.
- If the input force is bigger than the output force, there is not a mechanical advantage, but rather a distance advantage. You can say the mechanical advantage is smaller than 1.

When engineers, scientists and technologists design mechanisms, they want to know exactly how big the mechanical advantage in a system is. It is not good enough for them to say that the mechanical advantage is bigger than 1 or smaller than 1. They need a number to tell them exactly how big or small the mechanical advantage is. We call this number the mechanical advantage.

You can use the abbreviation **MA** for mechanical advantage.

The mechanical advantage is calculated by dividing the output force by the input force:

$$\text{mechanical advantage} = \text{output force} \div \text{input force} = \frac{\text{output force}}{\text{input force}}$$

You can also say that the mechanical advantage is the **ratio** between the output force and the input force.

If a lever makes it *easier* to lift a heavy weight, the input force is *less* than the output force, and the mechanical advantage is greater than 1.

For example, if the output force is 12 and the input force is 4, the mechanical advantage is **calculated** in the following way:

12 ÷ 4. This can also be written as $\frac{12}{4}$ or $12/4$.

The answer to this calculation can be written in different ways:

a ratio of 3 to 1
OR 3 : 1
OR 3

These different ways of writing the answer all mean the same thing: they are **equivalent**. You can write an equals sign instead of "OR" between the different ways of writing the answer, because they are equivalent.

This means that the output force is three times greater than the input force. You can also say that the lever gives a mechanical advantage of 3.

But you cannot get something for nothing. If the input force is 3 times less than the output force, you will have to move the input arm 3 times further than the output arm. Look at Figure 8 to see how this works.

LB page 155

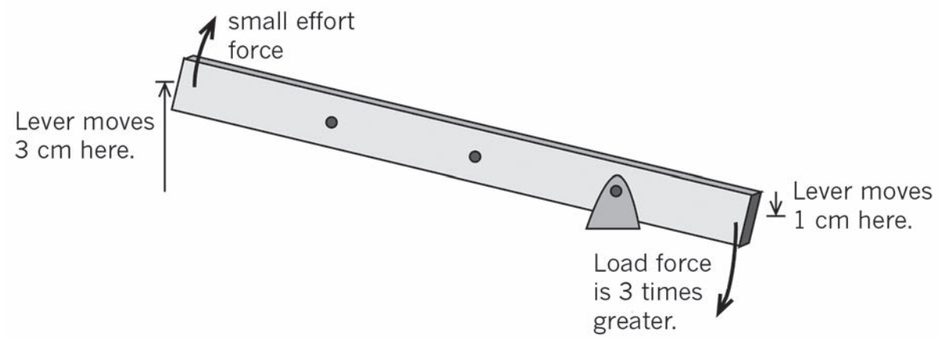

Figure 8: A mechanical advantage of 3

Not all levers give a mechanical advantage. Sometimes the input force is greater than the output force. These levers make it harder to move something, but the output movement will be greater than the input movement.

If a lever makes it *harder* to lift a heavy weight, the input force is *greater* than the output force, and the mechanical advantage will be less than 1.

If, for example the input force is 3 and the output force is 1, the mechanical advantage is output force ÷ input force = $\frac{1}{3}$, in other words 1 third.

In the example above, the output force is only 1 third as big as the input force. The output arm will move 3 times further than the input arm. In other words, this lever gives a **distance advantage** of 3. Look at Figure 9 to see how this works.

When a mechanical system changes a small input distance into a larger output distance, the system gives a **distance advantage**.

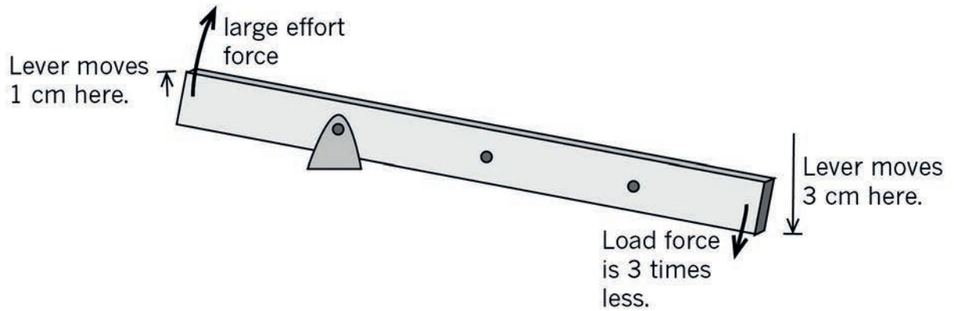

Figure 9: A distance advantage of 3

LB page 156

On a lever, the distances moved by the input arm and the output arm are directly related to their distances away from the fulcrum.

- If the distances from the fulcrum are equal, the distances moved will be equal.
- If the fulcrum is closer to the *input force*, the distance moved by the *input arm* will be *smaller*.
- If the fulcrum is closer to the *output force*, the distance moved by the *output arm* will be *smaller*.

If the distance between the fulcrum and the output is less than the distance between the fulcrum and the input, the output force will be *greater* than the input force and the lever gives a mechanical advantage.

If the distance between the fulcrum and the output is *greater* than the distance between the fulcrum and the input, the output force will be less than the input force and the lever gives you a distance advantage. In this case, you will not get a mechanical advantage.

The first-class lever and mechanical advantage

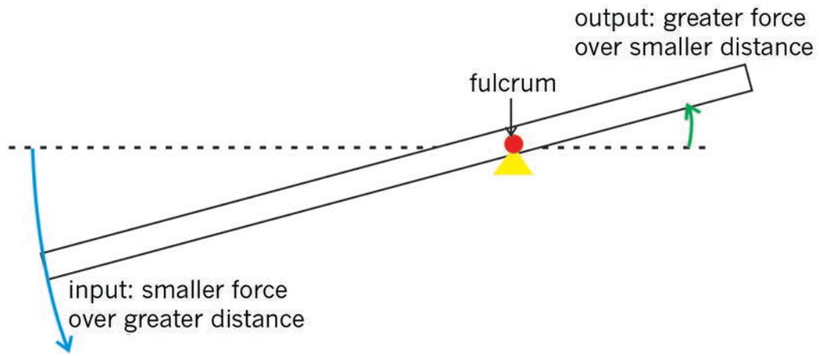

Figure 10: A small input force over a large input distance

A lever can change a *large* movement with a *small* input force into a *small* movement with a *large* output force. When you use a bottle opener, you use a small input force to pull up the long handle, and the lever mechanism makes the output force big enough to bend the top of the bottle.

If MA > 1, then a *small* input force over a *big* distance at one end, can move a *bigger* output force over a *shorter* distance at the other end. The bottle opener, scissors, hammer and pliers in Figures 4 to 7 are examples of this.

The first-class lever and distance advantage

You can also use a lever the other way around. You can use a *big* input force over a *small* input distance. This gives a *smaller* output force over a *bigger* output distance. You can see this in Figure 11.

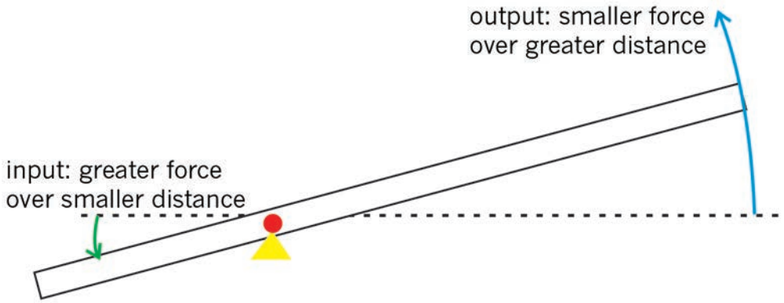

Figure 11: A large input force over a small input distance

These kinds of levers are often used to help cranes lift things very high. If, for example, the input arm moves 1 cm down and lifts the output arm 4 cm up, the lever is giving you a distance advantage. But the input force has to be 4 times bigger than the output force, so the mechanical advantage is less than 1:

MA = output force ÷ input force = $\frac{1}{4}$ = 1 quarter.

When the MA < 1, there is no mechanical advantage, but rather a distance advantage.

A big input force over a small distance at one end, produces a smaller output force over a bigger distance at the other end.

The pair of kitchen or braai tongs in Figure 12 is an example of a tool that gives a distance advantage.



Figure12: A pair of kitchen or braai tongs

11.2 Linked levers

LB page 158

Figures 13 and 14 show two types of tools that are used for pruning trees, which means to cut twigs and branches from trees.



Figure 13: Pruning shears



Figure 14: Loppers

Questions LB p. 158

1. How do you know that both of these tools use levers?

   The handles as well as the cutting blades of these tools rotate around pivot points. In each of these tools, the fulcrum therefore acts as the fulcrum that supports the lever.

2. How do you know that the levers used are first-class levers?

   The fulcrums are between the handles (where the input force is applied) and the cutting blades (where the output force is exerted).

3. Do both of these tools give a mechanical advantage? Explain your answer.

   Yes, because the distance from the end of the handle to the fulcrum is greater than the distance from the end of the cutting blade to the fulcrum.

4. Which of these tools will give you greater mechanical advantage? Explain your answer.

   The loppers, because the ratio between the distance from the end of the handle to the fulcrum and the distance from the end of the cutting blade to the fulcrum is greater than it is for the pruning shears.

All frst-class levers have the fulcrum between the input and the output.



Figure 15: A see-saw is a first-class lever.



Figure 16: A pair of scissors is a pair of linked first-class levers.

LB page 159

First-class levers

The fulcrum is the fixed point on a lever. The lever doesn't go up or down at the fulcrum. All the other points on a lever rotate around the fulcrum. You can also say the rest of the lever 'pivots' around the fulcrum.

Remember from Term 1 Chapter 5 (p. 56) that a fulcrum is only a fulcrum if it supports the action of a lever. To do that, a fulcrum needs to be fixed in position. When a fulcrum is not fixed, it merely allows linked/connected parts to move.

In a **first-class lever**, the fulcrum is always between the input and the output.

The **input force** is the force that you apply to a lever to make it move.

The **output force** is the force that the lever exerts on the load.

Systems of linked levers

A lever system that consists of more than one pair of levers that are connected to one another, is called a system of linked levers.

The bolt cutter in Figure 17 has two pairs of linked levers that are connected to each other. Figure 2 at the start of the chapter shows the movement of the parts of a bolt cutter.

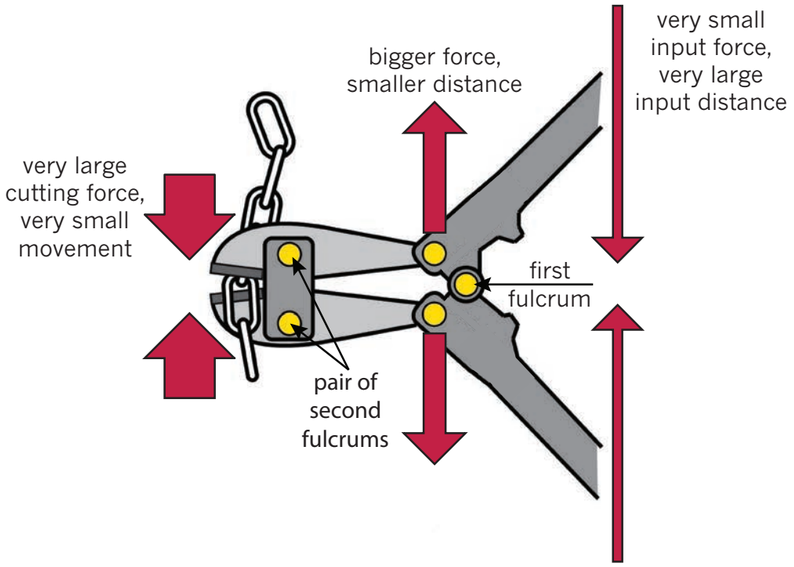

Figure 17: This is a bolt cutter. It consists of two pairs of linked levers.

LB page 160

- The pair of dark grey levers on the right have the handles on them. They share a single fulcrum.
- The pair of light grey levers on the left have the cutting blades on them. They have a separate fulcrum for each lever.
- There are also two fulcrums in the middle of the two pairs of levers, to link them together. They do not act as fulcrums, because they move together with the levers, instead of the levers rotating around them.

Questions LB p. 160

1. Are both the pairs of levers used in the bolt cutter first-class levers? Explain your answer.

   Yes, in both pairs of levers, the fulcrum is between the input force and the output force.

2. What can you say about the total mechanical advantage of the two pairs of levers linked to each other?

   Each pair of levers has a mechanical advantage greater than one. The mechanical advantage of the two pairs of levers linked together is greater than the mechanical advantage of any one of the pairs of levers on its own.

3. Look at the cutting levers (the end that cuts). What is different about the fulcrums of these levers compared to a pair of scissors?

   Each one of these levers has its own fulcrum. In a pair of scissors, both levers use the same fulcrum.

4. Compare the arrangements of the fulcrums in the bolt cutter and the pair of scissors. Why are the fulcrums arranged in a different way in a bolt cutter than in a pair of scissors?

   Bolt cutter: Each cutting lever rotates around its own fulcrum so that the cutting levers never cross each other. When the input side of the cutting levers is pulled open, the output (cutting) part is pressed closed.
   Scissors: The two cutting levers share the same fulcrum, so that the levers cross each other. When the input side of the levers (the handles) is pulled open, the output (cutting) part is also pulled open.

Second-class levers give a mechanical advantage

Second-class levers have the fulcrum at one end and the input at the other end. The output is between the input and the fulcrum.

A second-class lever always gives a mechanical advantage. The input is always further away from the fulcrum than the output, so the input arm always moves further than the output arm. This means that the output force will always be bigger than the input force.

So the MA is always greater than 1:

MA = output force ÷ input force > 1.

Second-class levers always give MA > 1.

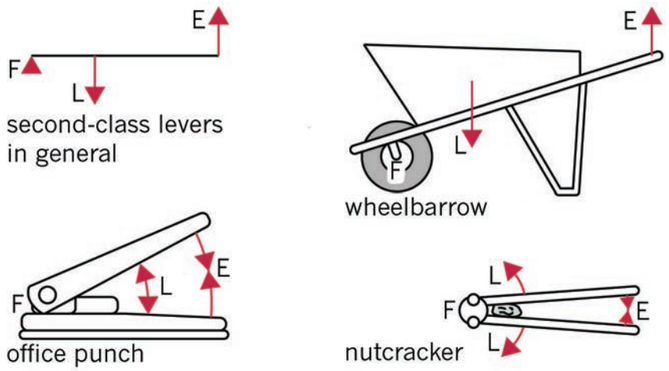

Figure 18: Second-class levers always give a mechanical advantage.

Questions LB p. 161

1. Give one more example of your own for each of the following types of levers.
   (a) first-class lever

   crowbar; see-saw

   (b) second-class lever

   lifting a heavy rock with a long stick/pole (when you stick the bottom end of the pole in the ground)

Third-class levers give a distance advantage

Third-class levers also have the fulcrum at one end, but the output is at the other end. The input is between the fulcrum and the output.

The input is always closer to the fulcrum than the output, so the output arm always moves further than the input arm.

This means that the output force will always be smaller than the input force.

So the mechanical advantage is always smaller than 1:

MA = output force ÷ input force < 1.

Third-class levers always give MA < 1.

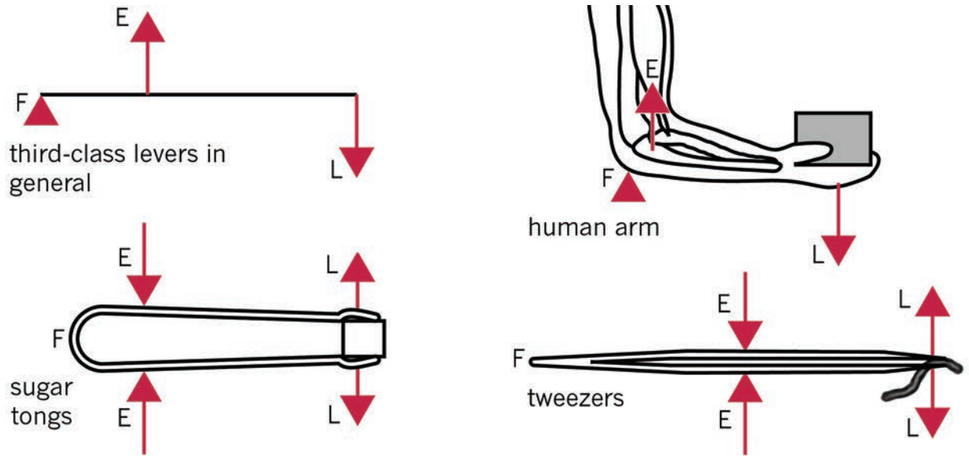

Figure 19: Third-class levers always give a distance advantage.

11.3 Gear systems

LB page 162

You learnt about gears in Term 1 this year. Do you remember? Here are a few reminders:

Mechanical advantage and speed advantage

A system of two or more gears can increase or decrease the **rotational speed** of a wheel or axle. You can also call the rotational speed the **turning speed**.

The teeth of two gears **mesh** together so that if one gear turns, the other gear will turn in the opposite direction. Mesh means that the teeth of the gears fit in-between one another.

- A *small* driver gear connected to a *large* driven gear will change a *fast* rotational speed into a *slower* rotational speed. The output rotational force will be bigger than the input rotational force. Therefore, this system gives a mechanical advantage.
- A *large* driver gear connected to a *small* driven gear will change a *slow* rotational speed into a *faster* rotational speed. This system gives a distance or speed advantage.

Torque and revolutions per minute

A turning force is called a torque.

The speed of a turning wheel is measured in revolutions per minute, or rpm.

A small driver and a large driven gear LB p. 162

Look at the two connected gears in Figure 20. Gears that have teeth like these are called spur gears. Now answer the questions that follow:

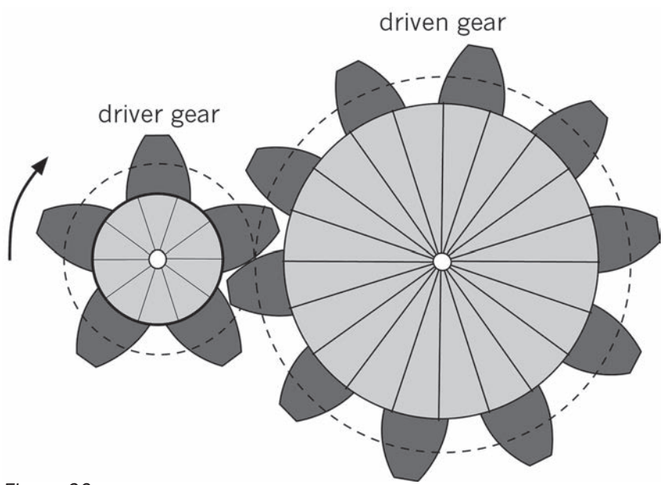

Figure 20

1. If the driver gear turns clockwise, which way will the driven gear turn?

   It will turn in the opposite direction (anti-clockwise).

2. Count the numbers of teeth on the two gears in Figure 20. How many revolutions will the driver gear need to turn to make the driven gear turn once? Explain why this happens.

   The driver gear will turn twice (two times) for each revolution of the driven gear. This is because the 5 teeth on the driver gear will turn the driven gear half way around, and it has to turn another revolution to turn the rest of the teeth of the driven gear as well.

3. Will this system give a mechanical advantage? How do you know?

   Yes, because the rotational speed of the output gear is slower than the rotational speed of the input gear. If the rotational speed of the output gear is smaller, it means that the turning force of the output axle is bigger than on the input axle.

Reminder: A mechanical advantage means that the turning force at the output axle is greater than the turning force at the input axle.

LB page 163

A large driver and a small driven gear LB p. 163

Look at the two gears in Figure 21. The driver gear is now large and the driven gear is smaller.

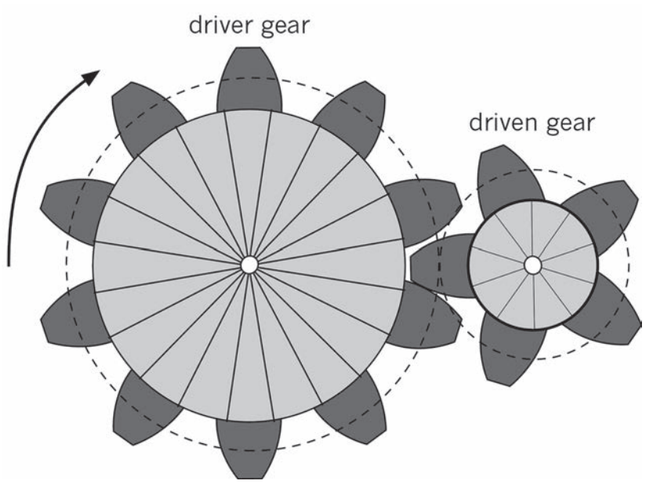

Figure 21

1. Will the driven gear turn faster or slower than the driver gear? Explain your answer.

   The driven gear will turn faster than the driver gear because it has fewer teeth than the driver gear.

2. The driver gear has 10 teeth and the driven gear has 5 teeth. How many revolutions will the driver gear need to turn to make the driven gear turn once? Explain why this happens.

   Half a revolution of the driver gear will make the driven gear turn one complete revolution. This is because only half of the teeth of the driver gear will have meshed with all 5 of the teeth of the driven gear.

3. Will this gear system give a mechanical advantage or a speed advantage? How do you know?

   This gear system will give a speed advantage. The driven gear will turn faster than the driver gear because the driven gear has fewer teeth.

Reminder: A speed advantage means that the speed of rotation of the driven axle (output axle) is faster than the speed of rotation of the driver axle (input axle).

Idler gears LB p. 164

Look at Figure 22. The driver and the driven gear are the same size. In the middle there is a small gear called an idler gear.

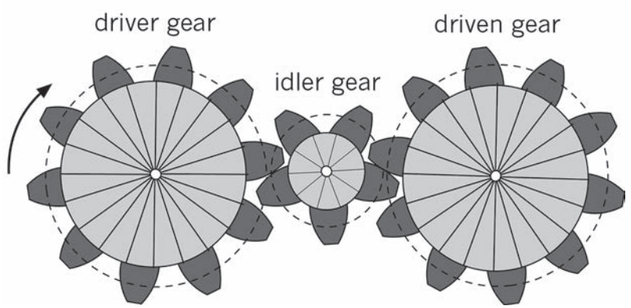

Figure 22

What does an idler gear do?

An idler gear is a gear that turns between a driver and a driven gear. It allows the driver and the driven gears to turn in the same direction.

An idler gear does not change the mechanical advantage of a gear system.

When two gears mesh, they turn in opposite directions. This is called **counter rotation**.

When an idler is used between two gears, the direction of rotation of the driver and driven gear is the same. This is called **synchronised rotation**.

1. Will the idler gear turn faster or slower than the driver gear? Explain.

   The idler gear will turn faster than the driver gear because it has fewer teeth than the driver gear.

2. Will the idler gear turn faster or slower than the driven gear? Explain.

   The idler gear will turn faster than the driven gear because it has fewer teeth than the driven gear.

3. Will the driver gear and the driven gear turn at different speeds? Explain.

   No, they will turn at the same speed. For each tooth of rotation on the driver gear, the idler gear will rotate one tooth, and the driven gear will rotate one tooth.

4. Will the driver gear and the driven gear turn in different directions? Explain.

   No, they will turn in the same direction. The idler gear turns in the opposite direction of the driver gear, and the driven gear turns in the opposite direction of the idler gear. So the driven gear turns in the opposite direction of the idler gear, but in the same direction as the driver gear.

Bevel gears LB p. 165

Bevel gears are used when you want to change the direction of turning. Look at Figure 23. It shows how two bevel gears mesh together.

- The top gear will turn on a **horizontal** axle.
- The bottom gear will turn a on a **vertical** axle.
- The bevel gear system changes the direction of rotation by 90°.

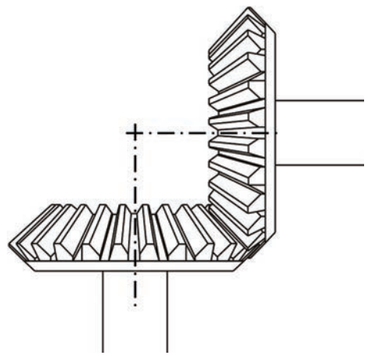

Figure 23: Bevel gears

Horizontal means parallel to the ground. **Vertical** means at 90° (at a right angle) to the horizontal direction.

Figure 24 on the next page shows a hand drill and an egg beater.

- The driver gear is a large bevel gear attached to a crank handle.
- The driven gears are the small bevel gears. The bottom bevel gear forces the drill to turn and the egg beater to rotate its blades.

1. Do you think the hand drill gives you a speed advantage or a mechanical advantage? Explain your answer.

   It gives a speed advantage, because the small output gear will rotate much faster than the big input gear.

2. Explain how the bevel gears on the drill work.

   Both the big input gear and the two small output gears are bevel gears. This gear system changes the direction of rotation from a rotation around a horizontal axis (for the big input gear) to a rotation around a vertical axis (for the small output gears).



Figure 24: A hand drill and an egg beater

Something you could do at home: Make a can crusher

The lever on a real crane lifts a weight or load. The lever helps to lift the load higher. Levers are also used to squeeze or crush things. In this investigation, you will look at how a second-class lever can help you crush metal.

Many metal-working machines use levers to increase the input force, and the greater output force is used to cut metal sheets or to make holes in steel plates.

Empty cold drink and food cans are waste that take up a lot of space. But it does not have to take up so much space, since most of the volume of a can is taken up by the air inside it. If you crush it, it will take up very little space. Before cans are recycled to make new steel, they are crushed. It's much cheaper to transport the crushed cans to a recycling factory since they require less space and you can transport more at a time.

Design a second-class lever to crush cold drink and food cans. Make a rough sketch showing the dimensions. You can make this crusher from pieces of wood.

Next week

Next week, you will learn how to do mechanical advantage calculations for levers and gears.

Chapter 12
Mechanical advantage calculations

LB page 167

In this chapter, you will learn how to calculate the amount of mechanical advantage lever systems and gear systems give.

You will also learn how to calculate the speed with which a gear in a gear system will rotate, if you know how many teeth each gear has and the speed with which the other gear is rotating.

12.1 Calculate the mechanical advantage of a lever 205
12.2 Calculate the distance advantage of a lever 209
12.3 Calculate the speed advantage of gears 210



Figure 1: A claw hammer can be used as a lever to remove nails from wood.

12.1 Calculate the mechanical advantage of a lever

In the previous chapter, learners saw for the first time a formula for calculating the exact value, of the mechanical advantage of a lever. This formula calculates the ratio between the output force and the input force. In this section, they learn another formula for calculating the mechanical advantage, namely the ratio between:

- the length of the input arm (distance between input and fulcrum), and
- the length of the output arm (distance between output and fulcrum).

However, before this formula is shown to them, they first answer a set of questions that leads them to discover that there is a constant ratio between the input distance and the output distance. By reading the text after these questions, they make the connection that the ratio between the lengths of the input and output arms, is the same as the ratio between the sizes of the output and input forces.

Then learners use both these (equivalent) formulas to give accurate answers to questions about mechanical advantage, forces and distances in levers.

Learners simply talk about "so many units of force" as a way of saying how big a force is. They will later learn, in Natural Sciences, how scientists use the unit of Newtons to express the sizes of forces.

12.2 Calculate the distance advantage of a lever

In this section, learners apply the same formulas to do calculations about mechanical advantage, forces and distances for a lever that has a mechanical advantage smaller than 1. This lever gives a distance advantage and not a mechanical advantage.

12.3 Calculate the speed advantage of gears

This section is mostly revision of what was done in Term 1 Chapter 5 section 5.3, but learners now also gain additional knowledge and understanding about gears.

They learn that "revolutions per minute" (rpm) is a unit of measurement that can be used to say how fast something rotates.

They learn that a gear system gives either a mechanical advantage (gear ratio > 1) or a speed advantage (gear ratio < 1).

You should remind learners of levers to help them make a connection between the concept of gear ratio and the concept of mechanical advantage:

A lever gives either a mechanical advantage (MA > 1) or a distance advantage (MA < 1).

Learners calculate gear ratios, rotational speeds, and turning forces:

- by using the given formula for calculating gear ratio in terms of the numbers of teeth on the input and output gears, as well as
- by using the given formula for calculating gear ratio in terms of the diameters of the input and output gears (actually the 'pitch' diameters of the gears – learners will learn more about this in the next chapter).

When learners read about "Speed advantage and mechanical advantage" on page 173, something may feel wrong to some of them. If they feel that way, it is because the definitions are clumsy, and the learners are actually clever in noticing that.

The thing about the definitions that may feel 'wrong' is this:

gear ratio = mechanical advantage

And: gear ratio = speed ratio (see Term 1 Chapter 5 page 61)

So: speed ratio = mechanical advantage

But: speed advantage means mechanical disadvantage

In fact:

speed advantage = 1 ÷ (mechanical advantage)

As with all language conventions (like spelling rules), we have to talk using the same definitions, so that we can understand one another, even if we may argue that the definitions could have been improved. So, although the given definitions are clumsy, we have no choice but to use them.

LB page 168

12.1 Calculate the mechanical advantage of a lever

In the previous chapter, you learnt that you can calculate a quantity to say exactly how big or small the mechanical advantage is. This quantity is a **ratio**. It is calculated by dividing the output force by the input force.

You also learnt that if the output force is greater than the input force, the mechanical advantage (MA) is greater than 1: MA > 1.

Look at the lever in Figure 2. This lever is making the output force bigger, so you can say that it is giving us a mechanical advantage. There are two "arms" on a lever: the **input arm** and the **output arm**. The lever below shows the input arm in blue and the output arm in red.

A **ratio** of 1 to 4 is written as 1:4. This is simply another way to write the fraction ¼.

You also use a ratio to write the scale of a drawing.

The **input arm** is sometimes called the "effort arm".

The **output arm** is sometimes called the "load arm".

Calculations about a lever LB p. 168

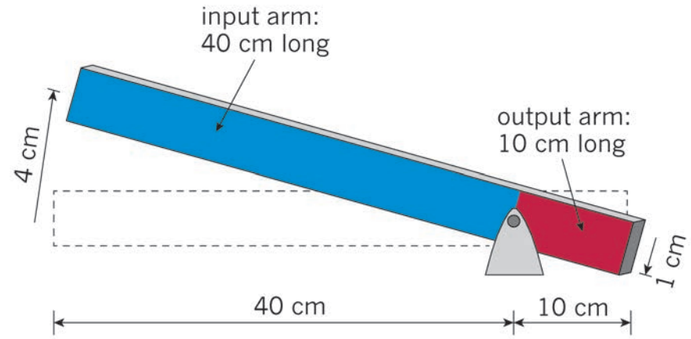

Figure 2: This lever has two arms, an input arm in blue and an output arm in red.

On the lever above, the input arm is 40 cm long and the output arm is 10 cm long. The input arm on this lever has been moved up by 4 cm. Study the picture and then answer the questions.

1. When the input arm is moved up by 4 cm, how far does the output arm move down?

   1 cm

2. When the input arm is moved up by 2 cm, how far does the output arm move down?

   1 cm ÷ 2 = $\frac{1}{2}$ cm

3. How far do you think the output arm will move if the input arm was moved up by 12 cm?

   1 cm × 3 = 3 cm

LB page 169

4. Now you can confirm what you have already worked out. Use the values in Figure 2 to calculate the ratio of the length of the output arm to the length of the input arm.

   output arm length : input arm length
   = 10 ÷ 40
   = 1:4

5. Use the values in Figure 2 to calculate the ratio of the output distance to the input distance.

   1 cm ÷ 4 cm = $\frac{1}{4}$

6. Calculate the ratio of the output distance to the input distance when the input distance is 2 cm. Use your answer from Question 2 above to help you.

   $\frac{1}{2}$ cm ÷ 2 cm = $\frac{1}{4}$

7. Calculate the ratio of the output distance to the input distance when the input distance is 12 cm. Use your answer from Question 3 above to help you.

   3 cm ÷ 12 cm = $\frac{1}{4}$

8. What can you say about the value of all of these ratios?

   The values of the ratios are always the same.

The ratio of input arm and output arm in levers

If the input arm is 400 cm long and the output arm is 100 cm long, then the output distance will always be:

output distance = $\frac{100}{400}$ × input distance.

If you lifted this lever by 20 cm, then:

Output distance = $\frac{100}{400}$ × input distance = $\frac{100}{400}$ × 20 cm = $\frac{1}{4}$ × 20 cm = 5 cm.

This lever gives you a mechanical advantage because the input distance is larger than the output distance. We know that a lever with a larger input distance and a smaller output distance will give a mechanical advantage, so we can say that:

Input distance ÷ output distance	But we also know that:
= length of input arm ÷ length of output arm	Output force ÷ input force
= mechanical advantage (MA)	= mechanical advantage (MA).

The ratio *input arm distance : output arm distance* is the same as the ratio *output force : input force*, and this is the mechanical advantage.

A lever with an input arm 400 cm long and the output arm 100 cm long will give a mechanical advantage of:

$$MA = \frac{\text{input arm distance}}{\text{output arm distance}} = 400 \div 100 = 4.$$

This means that the output force will always be four times larger than the input force; and the input force will always be four times less than the output force.

Consider the force needed to keep a weight of 20 kg from falling due to gravity. If this weight is on the output side of the lever discussed above, then what weight is needed on the input side of the lever to balance it?

Weight on input side = $\frac{1}{4}$ × 20 kg = 5 kg.

LB page 170

Mechanical advantage

- $MA = \frac{\text{output force}}{\text{input force}}$
- $= \frac{\text{input arm distance}}{\text{output arm distance}}$
- output force = MA × input force
- $\text{input force} = \frac{\text{output force}}{MA}$

Calculations about a lever LB p. 170

Look at the lever in Figure 3. The lever is pushed down to crush a can.

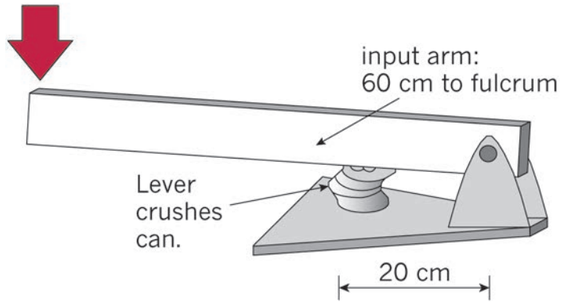

Figure 3: A lever crushing a can

1. How do you know that this lever will crush a can more easily than by hand?

   The distance between the effort (input force) and the fulcrum is bigger than the distance between the load (output force) and the fulcrum, so the mechanical advantage is bigger than 1.

2. With the can in the position shown, calculate the mechanical advantage that this lever will give.

   MA = 60 cm ÷ 20 cm = 3

3. If you need an output force of 20 "units of force" to crush the can, how much input force do you need?

   20 units ÷ 3 = 6 and $\frac{2}{3}$ units
   = 6,67 units

4. The designer decides to make it even easier to crush the can. She moves the can closer to the fulcrum. This reduces the output arm to 15 cm. Recalculate the mechanical advantage of the lever.

   MA = 60 cm ÷ 15 cm = 4

5. Recalculate the new input force needed to crush the can with an output force of 20 units.

   20 units ÷ 4 = 5 units

Length can be measured in units of metres, and mass can be measured in units of kilograms.

You will later learn in physics about how force is measured in units of "Newtons". But for the moment, you can call it "units of force", or "units".

12.2 Calculate the distance advantage of a lever

Look at the lifting system in Figure 4. It uses a hydraulic cylinder for the input force. It is a system that could be used for lifting an engine out of a motorcar.

The lifting lever at the top is a third-class lever, because the input is between the fulcrum and the output.

A third-class lever always gives a distance advantage. It never gives a mechanical advantage.

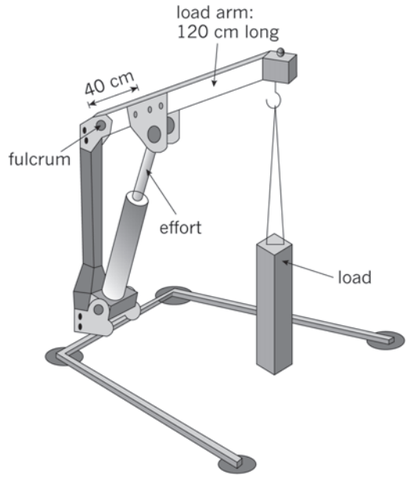

Figure 4: A lifting system

Calculations about the lifting system

1. How long is the input arm on this lever? 40 cm
2. How long is the output arm? 120 cm
3. Calculate the mechanical advantage that this lever gives.

   MA = 40 cm ÷ 120 cm = $\frac{1}{3}$ or one third

4. Explain what this MA value tells you about the output and input forces.

   The mechanical advantage is smaller than 1. This means that the output force is smaller than the input force.

5. A person wants to use this system to lift an engine out of a car. He needs the engine to be lifted by 90 cm. How far will the hydraulic cylinder at the input need to move for the engine to be lifted 90 cm at the output?

   90 cm × $\frac{1}{3}$ = 30 cm

6. If the system is designed to lift objects by 180 cm, how far does the hydraulic cylinder need to move at the input?

   180 cm × $\frac{1}{3}$ = 60 cm

LB page 172

12.3 Calculate the speed advantage of gears

The gear ratio

The gear ratio tells you in what way the speed of the driven gear depends on the speed of the driver gear.

Look at the two meshed gears in Figure 5. The driver or input gear has 5 teeth. The driven or output gear has 10 teeth.

The gear ratio is sometimes also called the "speed ratio" or the "velocity ratio"

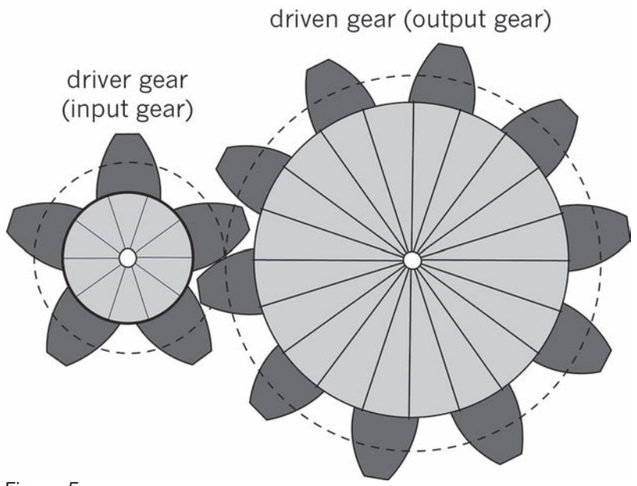

Figure 5

The **driver** gear is the **input** gear.

The **driven** gear is the **output** gear.

- If the driver moves one revolution, it pushes 5 of the teeth on the driven gear.
- If the driver gear moves by 2 revolutions, then 10 of the driven gear's teeth are moved. So the driven gear moves 1 revolution. Two driver revolutions give 1 driven gear revolution. So the rotational speed of the driver gear is two times the rotational speed of the driven gear. The speed ratio, which is the same as the gear ratio, is 2 : 1 or 2.
- If the the driven gear rotates 5 times, the driver gear rotates 10 times.

$$\text{gear ratio} = \frac{\text{rotational speed of input axle}}{\text{rotational speed of output axle}}$$

$$= \frac{\text{number of teeth on output gear}}{\text{number of teeth on input gear}} = \frac{10}{5} = 2$$

These formulae for gear ratio were given and explained in Chapter 5, on page 61 of the Learner Book.

Calculations using the gear ratio

The speed of a turning wheel is measured in revolutions per minute, or **rpm**. So if the driver gear is turning around twice every minute, it has a speed of 2 rpm. A speed of 2 rpm of the driver gear will give a speed of 1 rpm of the driven gear.

rpm stands for "revolutions per minute".

LB page 173

The gear ratio can be used to work this out:

Driven gear speed = (driver gear speed) ÷ (gear ratio)

= 2 ÷ 2

= 1 rpm.

Speed advantage and mechanical advantage

If a gear system gives a **speed advantage** because of its gear ratio, then it will give you a mechanical disadvantage. This means that if a driven gear revolves faster than its driver gear, it gives less turning output force to the machine.

If a driven gear revolves slower than its driver gear, it gives more turning output force to the machine.

Speed advantage
When a driver (input) gear makes the driven (output) gear rotate faster, then the gear system gives a speed advantage.

Calculations about the gear system LB p. 173

1. The gear system in Figure 5 has 5 teeth on the driver gear and 10 teeth on the driven gear. Calculate the rpm of the driven gear if the driver gear rotates at 1 500 rpm.

   1 500 rpm × $\frac{5}{10}$ = 750 rpm

2. If a driver gear has 15 teeth and a driven gear has 60 teeth, calculate the gear ratio.

   gear ratio = 60 ÷ 15 = 4 : 1

3. Consider a gear system where the driver gear has 25 teeth and the driven gear has 15 teeth.

   (a) If the driver gear rotates at 100 rpm, calculate the speed of the driven gear.

   100 rpm × $\frac{25}{15}$ = 167 rpm

   (b) What can you say about the output turning force at the driven axle compared to the input turning force at the driver axle? How does that change in this system?

   The output turning force will be three fifths (60%) of the input turning force.

Using the gear diameters to calculate the gear ratio

The easiest way of calculating the speed of a gear system is from the number of teeth on the gear wheels.

However, there is another way of calculating the speed of a gear system:

- If a gear wheel is small, it will have a small number of teeth and its diameter will be small.
- If a gear wheel is large, it will have more teeth and its diameter will be larger.

In Figure 5, the diameter of the large driven gear is 9,4 cm and the diameter of the small driver gear is 4,7 cm.

Note: The diameters are measured for the dashed circles in Figure 5, since those circles show where the gear teeth make contact.

LB page 174

The gear ratio is:

$$\text{gear ratio} = \frac{\text{diameter of driven gear}}{\text{diameter of driver gear}} = \frac{9,4}{4,7} = 2.$$

This is equal to the ratio calculated from the number of gear teeth:

$$\text{gear ratio} = \frac{\text{number of teeth on output gear}}{\text{number of teeth on input gear}} = \frac{10}{5} = 2.$$

More calculations for you to do LB p. 174

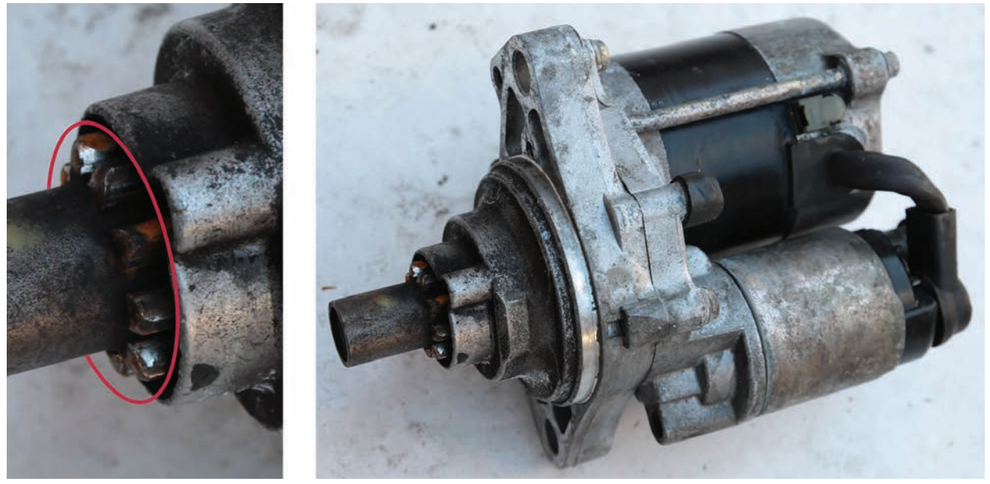

Figure 6: A car's starter motor has a small driver gear called a pinion, which is used to turn a bigger gear on the engine.

1. A starter motor of a car has a driver gear with a diameter of 4 cm. It drives a large gear connected to the crankshaft of the engine with a diameter of 60 cm. Calculate the gear ratio of the starter-motor system of this car.

   gear ratio = 60 cm ÷ 4 cm = 15 : 1

2. If the starter motor turns at 3 600 rpm, calculate the speed that the engine turns when the car starts.

   3 600 rpm ÷ 15 = 240 rpm

3. Do you think the turning output force that makes the engine turn is greater than, or less than, the turning input force of the electric starter motor?

   The output turning force is 15 times as big as the input turning force.

Next week

Next week, you will learn how to draw gear systems. You will also write design briefs for gear systems with an exact speed advantage and an exact mechanical advantage.

Chapter 13
Drawing gear systems

LB page 175

In this chapter, you will learn how to draw gear systems. First you will do some orthographic or two-dimensional (2D) drawings that show the exact sizes and numbers of teeth on the gears. For these types of drawings, you do not have to draw the teeth, so it is much easier.

Then you will write a design brief for some gear systems of your own and produce specifications for the systems. You will learn to use drawing instruments and an isometric grid to draw your gear systems in three dimensions (3D).

13.1 Draw gears in two dimensions (2D) 217
13.2 Write a design brief with specifications for gears 226
13.3 Draw gears in three dimensions (3D) 229



Figure 1: The back of a tow truck showing the winch that is used to lift and pull cars that have broken down. This winch is driven by en electric motor. It uses a gear system that gives a mechanical advantage.

LB page 176

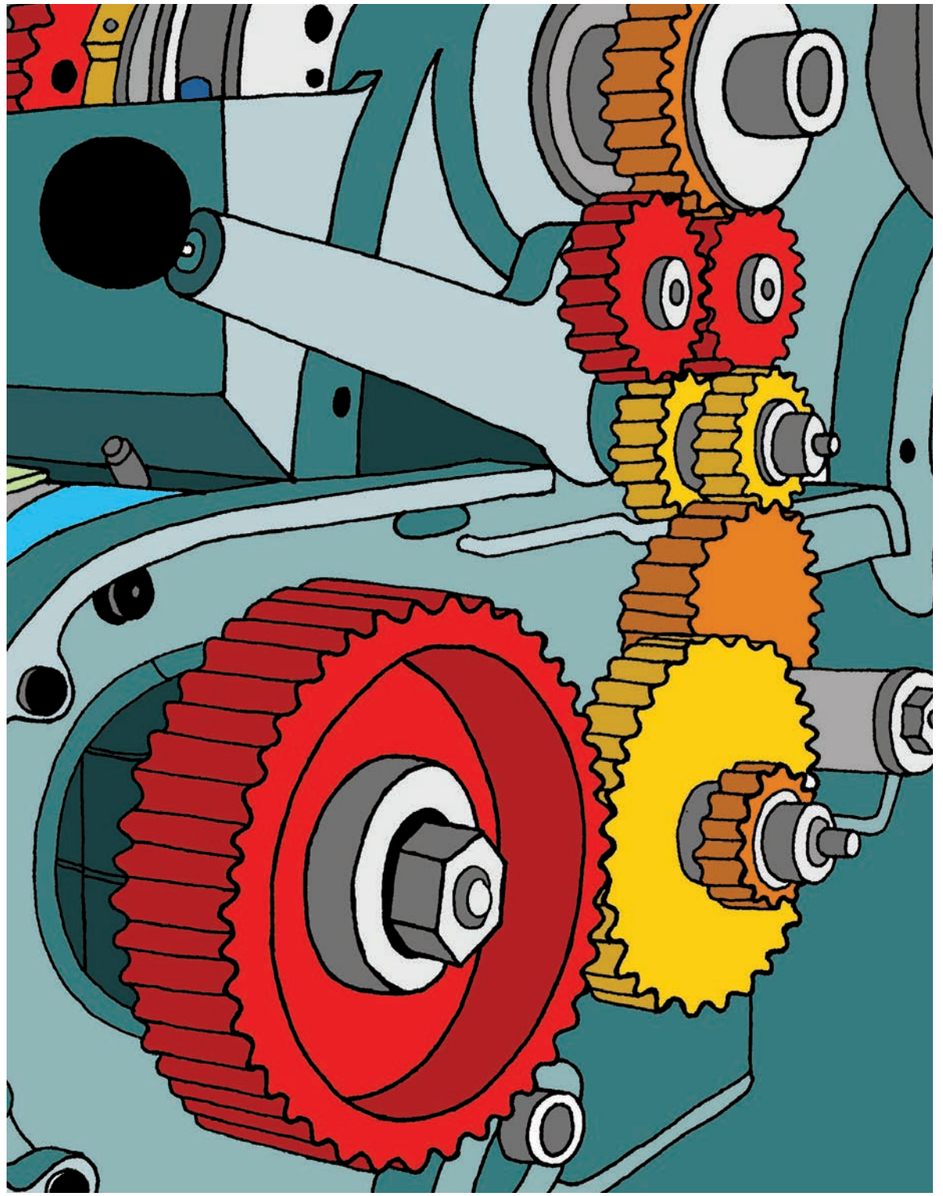

Figure 2: Spur gears with different radiuses. You will learn how to draw technical diagrams of gears when you are given the radius and the number of teeth of each gear. You don't need to draw the teeth!

13.1 Draw gears in two dimensions (2D)

In this section, learners are introduced to the names and meanings of the different specifications (or dimensions) for gear systems. They then practise making drawings of gears when the necessary dimensions are given. They do not draw the actual gear teeth.

In the previous chapter, learners were given a formula for calculating the gear ratio in terms of the **pitch circle diameters** of the input and output gears. In this section, they learn why the pitch circle diameter is different from the outside and inside diameters of a gear. Furthermore, when they draw gear systems, they experience that the pitch circle diameters show you where the meshing gear teeth touch one another.

To draw gear systems, learners follow instructions on the many steps needed to make these drawings. This is a good opportunity for them to read carefully in order to follow instructions. In many technological applications (like reading the instruction manual of a washing machine or for using computer software) one needs to read and follow instructions precisely.

While learners are drawing gear systems, they also get practice in drawing circles. They practise to think about where the centre of a circle should be, and what the radius should be (half of the diameter). You should demonstrate to learners how to use a compass if learners are not yet familiar with this. Some learners may not know to keep the sharp point of the compass still, and to only rotate the pencil point. If they use a compass like that, the sharp point will often slip on the paper.

They also answer questions about the gear systems that they draw. These questions are revision of what they learnt in the previous chapter. They have to think about the directions in which gears turn, which gear in a gear systems turns faster or slower, and they need to do some calculations about gear systems.

13.2 Write a design brief with specifications for gears

Learners look at two real-life applications of gear systems in machines. They have to determine the sizes of gears in the gear systems in order for those machines to work properly. They use their knowledge of mechanical advantage, gear ratio, and speed advantage to determine this. They learnt about that in the previous chapter. Then they draw the gear systems for those two real-life applications.

13.3 Draw gears in three dimensions (3D)

Learners follow given steps to draw gears in three dimensions on isometric grid paper. The same method can be used to draw wheels, pulleys and cylinders in three dimensions. In Chapter 16 (the mini-PAT), they will use this method when they draw the "sheave wheel" (or pulley) on top of a mine shaft head gear, in three dimensions.

LB page 177

13.1 Draw gears in two dimensions (2D)

When you draw a gear wheel, you show a number of different circle sizes, but you do not have to show the gear teeth. The specifications for the gear wheels and teeth are shown using notes and tables.

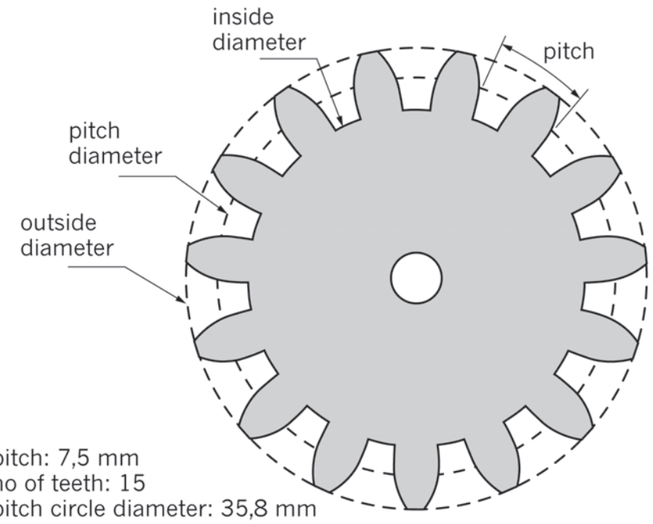

Figure 3: How to draw a gear wheel with 15 teeth

Figure 3 shows all the important information for a gear wheel:

- The **pitch** is the space for each tooth.
- The **outside diameter** shows the size of the circle that surrounds the teeth.
- The **inside diameter** shows where the teeth are joined to the inner wheel.
- The **depth** of the teeth is the difference between the outside radius and the inside radius. So it is half of the difference between the outside diameter and the inside diameter.
- When the teeth of two gears mesh, they touch one another somewhere in the middle between the outer and inner diameters. The **pitch diameter** is the diameter of the circle showing where the meshing gear teeth touch one another. Look again at Figure 5 in Chapter 12.

The pitch circle diameter on this gear is 35,8 mm. The distance around the pitch circle of this gear is the pitch circle circumference, which is:

Circumference = $\pi \times D = 3{,}142\ 8 \times 35{,}8$ mm = 112,5 cm.

So the pitch, or the space for each tooth = 112,5 ÷ 15 = 7,5 mm.

Look at Figure 4. This figure shows how to draw a gear wheel.

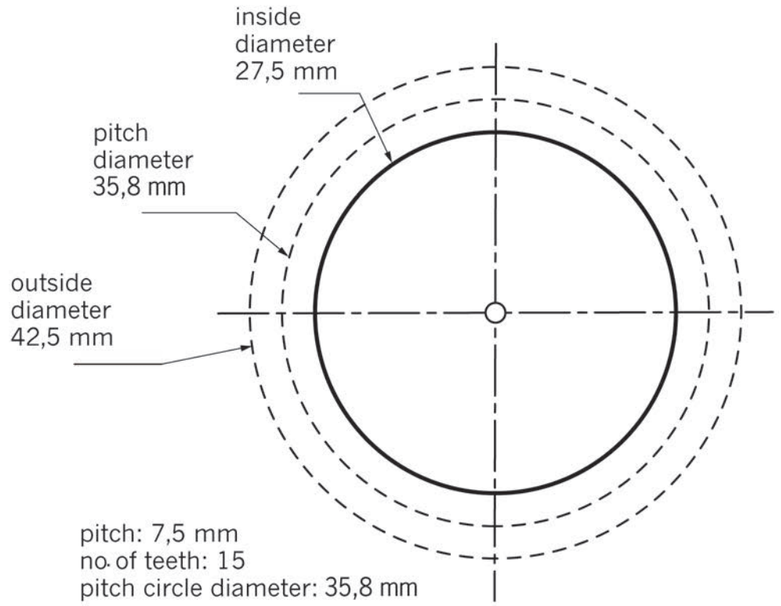

Figure 4: How to draw a gear wheel

Now draw this gear wheel on grid paper by following these steps:

- **Step 1:** Draw two crossing centrelines to mark the centre of the gear wheel.
- **Step 2:** Draw the pitch circle using a compass. In this case, you will need to set the compass radius to ½ of 3,58 cm (35,8 mm), which is just less than 18 mm.
- **Step 3:** Draw the outside diameter using a compass. You will need to set the compass radius to ½ of 4,25 cm (42,5 mm), which is a little more than 21 mm.
- **Step 4:** Draw the inside diameter. You will need to set the compass radius to ½ of 2,75 cm (27,5 mm), which is just under 14 mm.

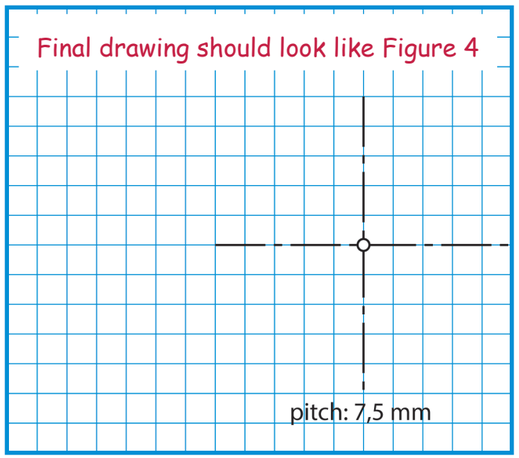

Figure 5

Drawing meshing gears

Look at the drawing of the meshing gears in Figure 6. A small driver gear is shown on the left. It is driving a larger driven gear on the right.

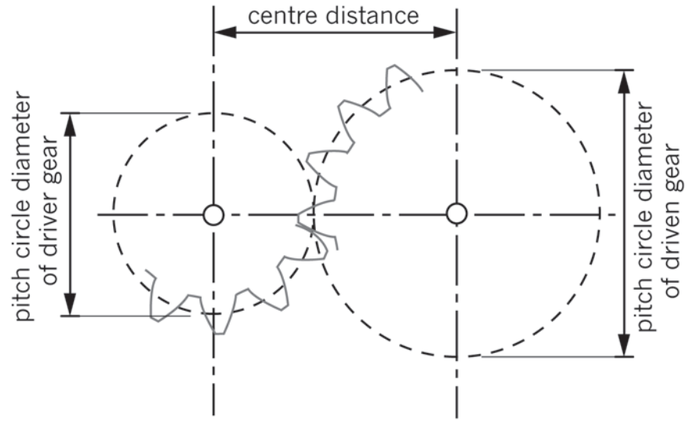

Figure 6: Meshing gears

Two spur gears will only mesh properly if:

- the size and shape of their teeth are the same, in other words the pitch and the depth of gear teeth on both gears are the same, and
- the pitch circle circumferences of the two gears are touching each other.

The line connecting the centres of the two gears is called the **centre line**. Centre lines are drawn as chain lines, with long and short dashes.

The distance between the gear centres is shown on this drawing as the **centre distance**. The exact centre distance for two meshing gears is the pitch circle radius of the driver gear plus the pitch circle radius of the driven gear.

Remember: The radius is ½ of the diameter.

If, for example, this driven gear had 15 teeth and a pitch circle diameter of 35 mm, and the driven gear had 30 teeth and a pitch circle diameter of 70 mm, then the centre distance would be:

Centre distance = ½ × 35 mm + ½ × 70 mm = 17,5 mm + 35 mm = 52,5 mm.

How to draw meshing gear systems *LB page 180*

Look at the meshing gears in Figure 6 on the previous page. Figure 7 below shows how to draw a diagram of this gear system, which has a 15-tooth driver gear and a 30-tooth driven gear.

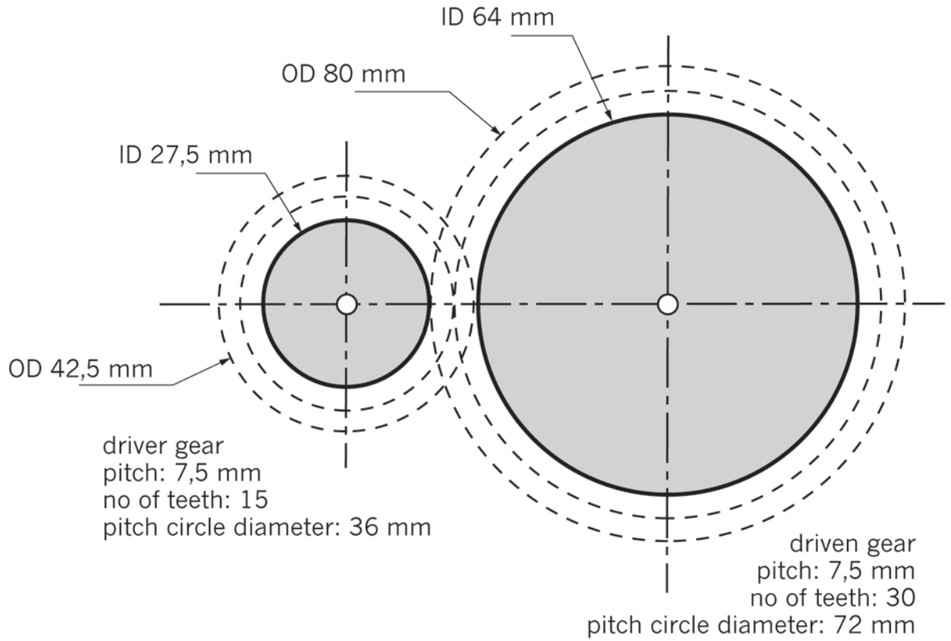

Figure 7

- **Step 1**: Start by drawing a horizontal centre line for both gears.
- **Step 2**: Draw a vertical centre line for the driver gear on the left. This marks the centre of the driver gear wheel.
- **Step 3**: Calculate the pitch centre distance. In this case, it would be: ½ of 36 mm + ½ of 72 mm = 54 mm.
- **Step 4**: Measure the centre of the driven gear from the centre of the driver gear.
- **Step 5**: Use a compass to draw the two pitch circles so that they just touch each other. In this case, the pitch circle of the driver gear will be 36 mm, so you will need to set the compass to a radius of 18 mm. The radius setting for the larger driven gear will be 36 mm, twice as big.
- **Step 6**: Use your compass to draw in the inside diameter (ID) and outside diameter (OD) circles.
- **Step 7**: Now add the information that tells people about the teeth. This is written underneath each gear wheel or on a table next to the drawing.

Draw gear systems with the driven gear rotating in the opposite direction of the driver gear LB p. 181

1. Use the steps on the previous page to draw a gear system with 15 teeth on a driver gear with a 36 mm pitch diameter and 30 teeth on a driven gear with a 72 mm pitch diameter. Use grid paper. The driver gear drawing has been started for you.

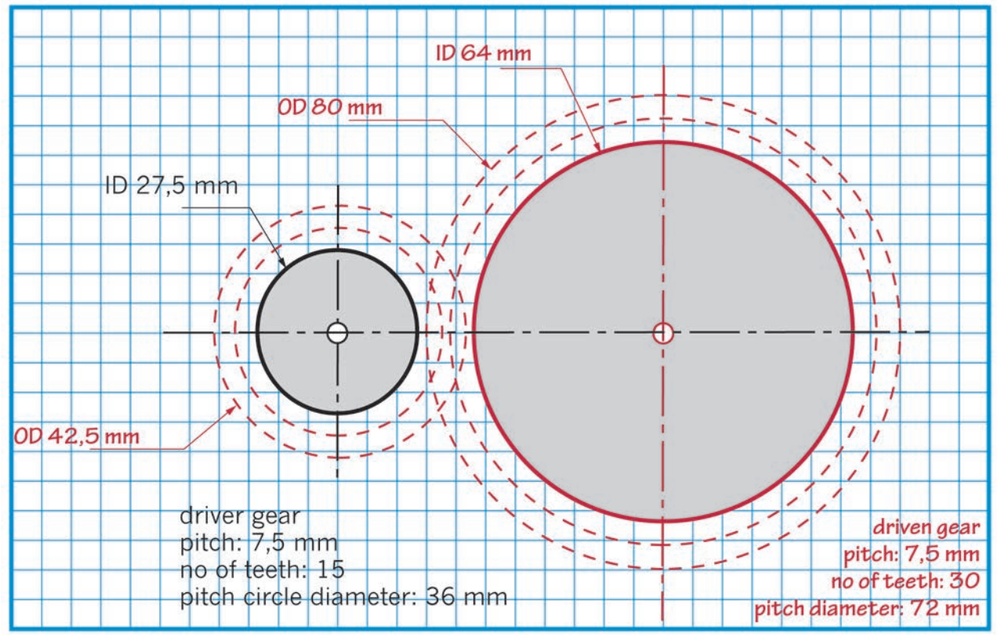

Figure 8: Copy and complete this drawing.

2. When you have finished your drawing, use arrows to show the direction of rotation of the driven gear if the driver is turning clockwise.
3. Will the driven gear be rotating faster or slower than the driver gear?

   slower, at half the speed

Draw gear systems with the driven gear rotating in the same direction as the driver gear LB p. 182

Do you remember what an idler gear does? It meshes between the driver and the driven gear. The idler does not change the gear ratio. All it does is change the direction of the driven gear. A gear system with an idler gear has the driven and the driver gears turning in the same direction.

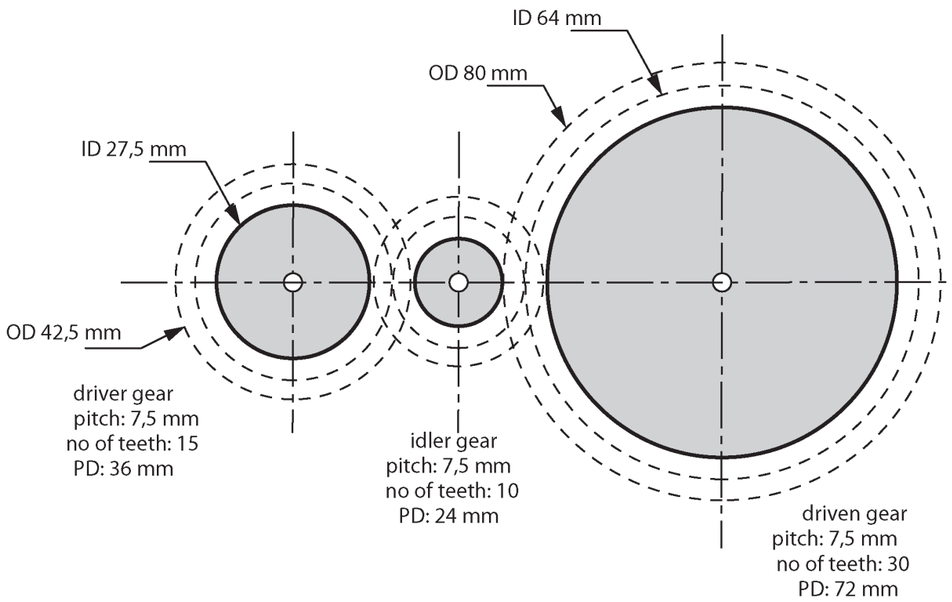

Figure 9

To draw a gear system with an idler, you will need to draw three gears instead of two. But the principle stays the same.

1. Draw the gear system in Figure 9 on grid paper.
2. Draw arrows to show which way each gear will turn.
3. Do the driver and driven gears rotate in the same or in opposite directions?

   They rotate in the same direction.
4. If the driver gear rotates at 1 500 rpm, how fast will the driven gear rotate?

   1 500 rpm × $\frac{15}{30}$ = 750 rpm

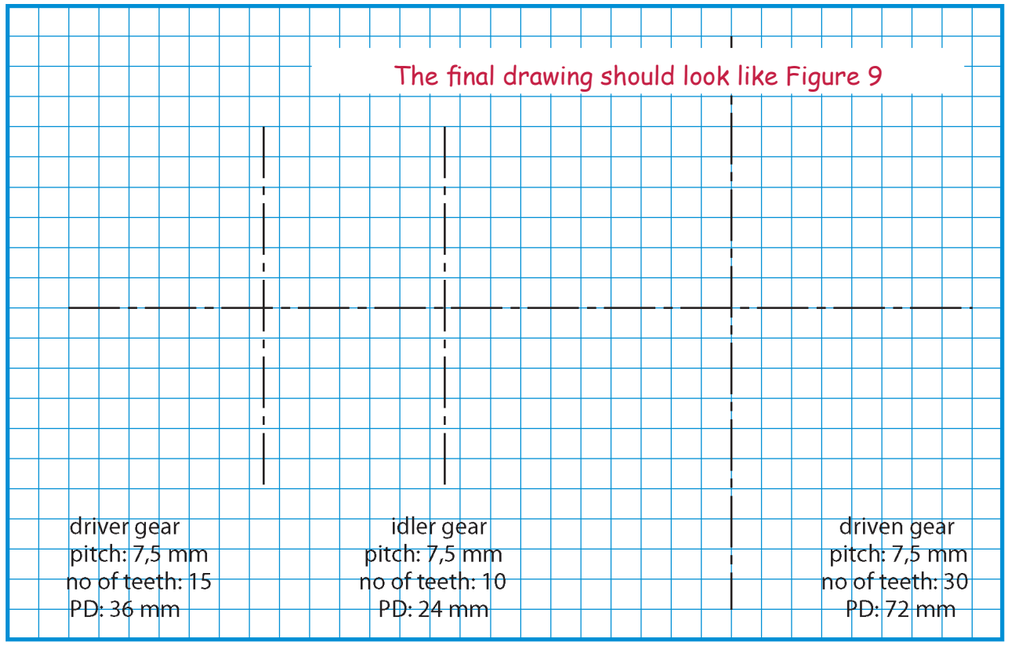

Figure 10

Homework: Draw gear systems with the driven gear rotating faster than the driver gear LB p. 183

Part A: Rotating in opposite directions

1. Draw the gear system shown in Figure 11. The driver gear has 45 teeth and a pitch circle diameter of 107 mm. The driven gear has 15 teeth and a pitch circle diameter of 36 mm. Draw your gear system on grid paper.

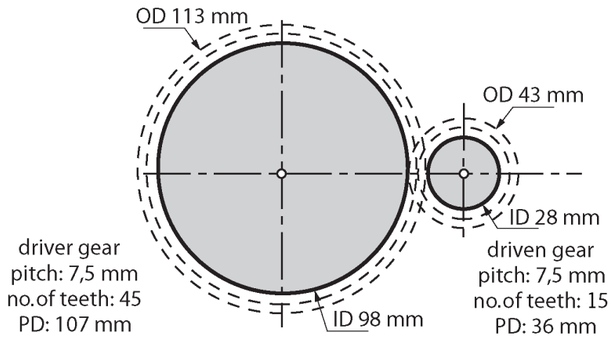

Figure 11

Learners' drawings should look like Figure 11.

LB page 184

2. What can you say about the speed of the driven gear compared to the driver gear?

   The driven gear turns three times as fast as the driver gear.

3. Does this system change the direction of rotation?

   Yes.

Part B: Rotating in the same direction

1. Add an idler to this gear system as shown in Figure 12. Now draw this new system on grid paper.
2. Draw arrows on the drawing to show the direction of rotation of each gear.

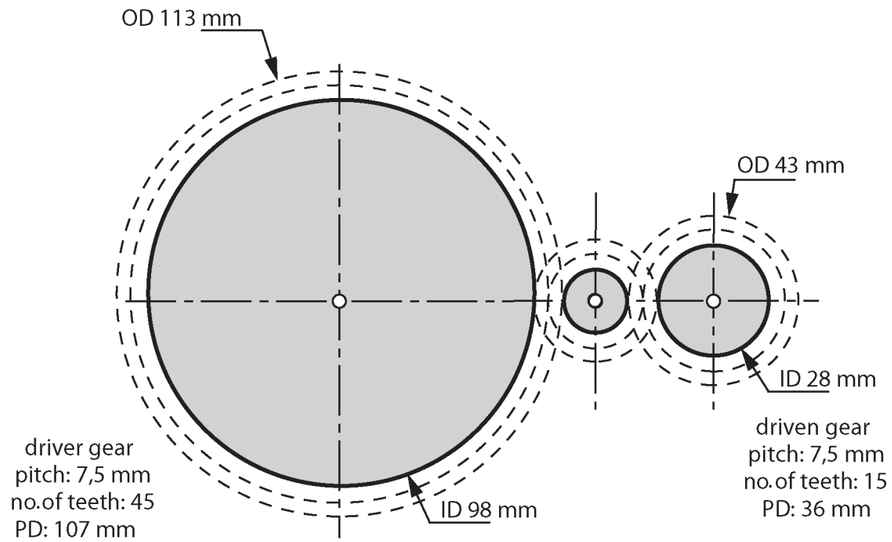

Figure 12

Learners' drawings should look like Figure 12.

3. What does the idler do?

   It ensures that the driver and driven gears turn in the same direction.

LB page 185

13.2 Write a design brief with specifications for gears

Gear systems have two important uses:

- A gear system can give a mechanical advantage. In this case, a small driver gear is used to turn a larger driven gear. The output of the system turns more slowly, but with greater turning force.
- Gears can also give a speed advantage. In this case, a large driver gear will turn a smaller driven gear. The driven gear turns faster than the driver gear, but with less turning force.

In this lesson, you will design gear systems that use both these advantages.

A design brief for a gear that gives a mechanical advantage

Look at Figures 1 and 15. It shows a winch for a **tow** truck. Winches are used to pull broken-down cars onto the back of a tow truck.

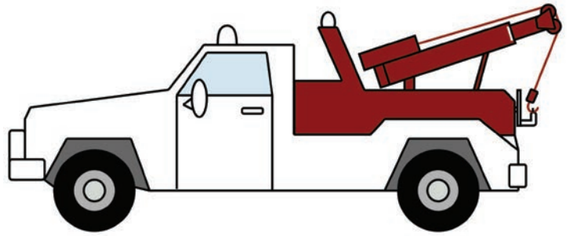

Figure 13: A winch is used to pull broken-down cars onto the back of a tow truck.

A problem with this winch

The company using this winch has found that is not powerful enough to pull large vehicles.

The company asked you to improve the winch. They want the winch to pull large vehicles that are three times as heavy as ordinary cars.

The word **tow** means to pull a car behind a moving truck for a certain distance. Tow trucks can tow cars, but they can also pull cars onto the back of the truck to carry them to the repair shop.

Write a design brief — LB p. 185

1. Write a few short, clear sentences that summarise the problem that needs to be solved, as well as the purpose of the proposed solution. Begin your first sentence with the words:

   I am going to design ...

   I am going to design a gear system for the winch of a tow truck to allow it to pull a vehicle that is up to three times as heavy as an ordinary car.

2. Write a list of specifications for the new winch solution.

   Remember: Specifications are lists of things that your solution must do, and some things that it must not do.

   The winch must be able to pull vehicles that are up to three times as heavy as an ordinary car. The gear system should not change the direction of rotation. The cable of the winch must be strong enough not to break when it pulls the weight of three cars.

A design for the improved winch LB page 186

3. Describe how you are going to improve this winch.

   I am going to add a gear system to the winch that gives a mechanical advantage, but that does not change the direction of rotation.

4. How will you know that the winch can pull vehicles that are up to three times heavier than an ordinary car?

   The driven gear will be three times the size of the driver gear.

5. Copy and complete the drawing in Figure 14 to show how you will improve the winch. Draw the driver gear on top of the motor. Then show where you will place the winder, and draw the winder gear. Use a pitch of 7,5 mm and a depth of 7,5 mm for the gear teeth. Label your drawing with the pitch and number of teeth on each of the gear wheels.

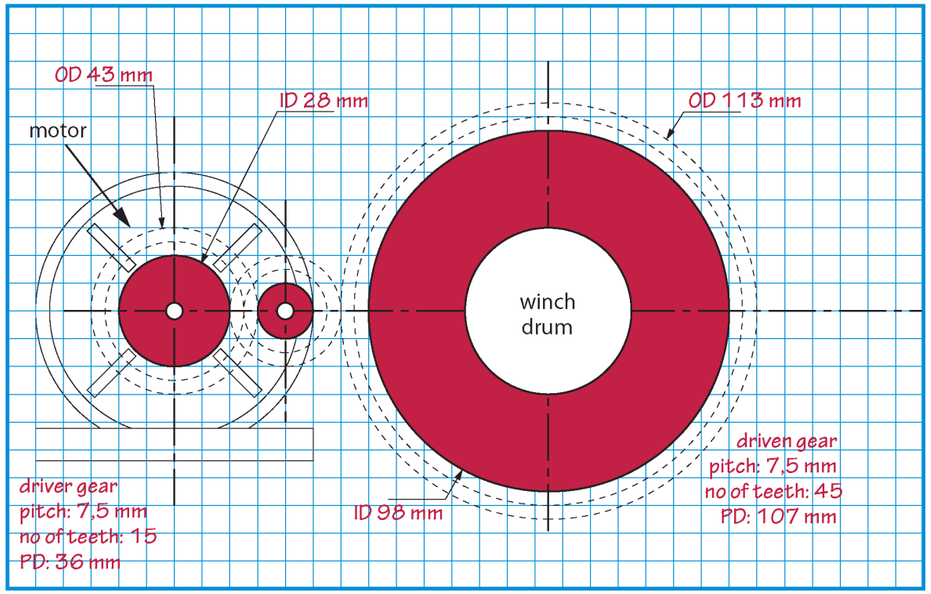

Figure 14: Copy and complete this drawing to show how you will improve the winch.

Write a design brief for a gear that gives a speed advantage

LB p. 187

Look at the system shown below. It shows the inside of a wind turbine. The wind turns the propeller and the propeller turns an electric generator to make electricity.

The problem with wind turbines

The blades of wind turbines turn slowly, at about 9 to 19 rpm. But the electric generator that is driven by a wind turbine needs to turn faster. A turbine manufacturer needs a gear system that will make the generator turn at least four times faster than the wind turbine. Can you help?

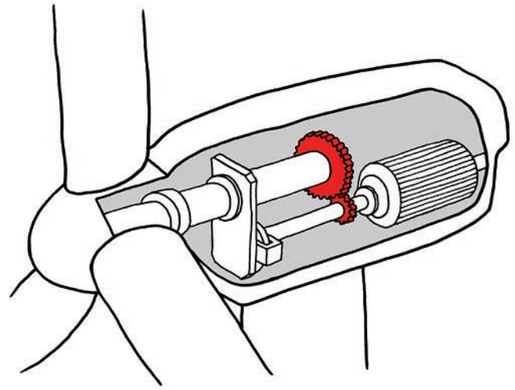

Figure 15: Inside a wind turbine

1. **Write a design brief.** You need to write a few short, clear sentences that summarise the problem that needs to be solved, and the purpose of the proposed solution. Begin your first sentence with the words:

   I am going to design ...

   I am going to design a gear system for a wind turbine. This gear system will convert the slow rotational speed of the rotors into a rotational speed of the generator that is four times faster.

2. **Specifications for your solution.** Write a list of specifications for the gear system solution.

   The driven gear must turn at 4 times the speed of the driver gear.

A design for the improved wind turbine

1. Draw your design on grid paper. Your design should show how you will make the driven generator of the wind turbine move four times faster than the driver. Use a pitch of 0,75 cm and a depth of 0,75 cm for the gear teeth.
2. Label your drawing with the pitch and number of teeth on each of the gear wheels.

   A gear with 10 teeth has a pitch diameter (PD) of 2,4 cm.

   A gear with 15 teeth has a PD of 3,6 cm.

   A gear with 40 teeth has a PD of 9,5 cm.

   A gear with 60 teeth has a PD of 14,3 cm.

   Possible answers:

   a) Driver gear with 40 teeth and driven gear with 10 teeth.

   a) Driver gear with 60 teeth and driven gear with 15 teeth.

Note to the teacher:

The pitch circle diameter is more or less halfway between the inside and the outside diameters of the gear. However, to know exactly how far from the pitch diameter the outside and inside diameters are respectively, one needs to do detailed design of the gear teeth. This is not done in technology at school, so learners cannot exactly determine the values for the inside and outside diameters.

What is important for this question, is that learners choose the outside and inside diameters so that the difference between the outside and inside diameters is exactly two times the depth of the teeth. See the definition of "depth of the gear teeth" on page 177.

LB page 188

13.3 Draw gears in three dimensions (3D)

Drawing gears in 3D is mostly about drawing circles in 3D. In this activity, you will draw 3D gears on isometric grid paper.

If you follow the instructions step by step, your drawing will be correct.

How to draw an isometric circle

LB p. 188

Look at the pictures in Figure 16. They show you how to draw a circle on isometric grid paper. This circle has a diameter of 2 cm, so it is nearly the size of a small gear wheel. Below is an outline of how it can be done.

- **Step 1:** Make a dot where you want the centre of the circle to be.
- **Step 2:** Draw a horizontal chain line through the centre, going from left to right up the sloping lines of the grid.

- **Step 3:** Draw a vertical chain line going through the centre.
- **Step 4:** Draw a guide box that will surround your circle. This box is shown in red in Figure 16A.
- **Step 5:** Mark four dots at the centre points of the sides of the square. These dots are shown in red in Figure 16B. These dots mark the outside points of your circle.
- **Step 6:** Now sketch a curve joining these four dots. This shape is not a true circle. Its actual shape is an ellipse slanting at 30°.

A B

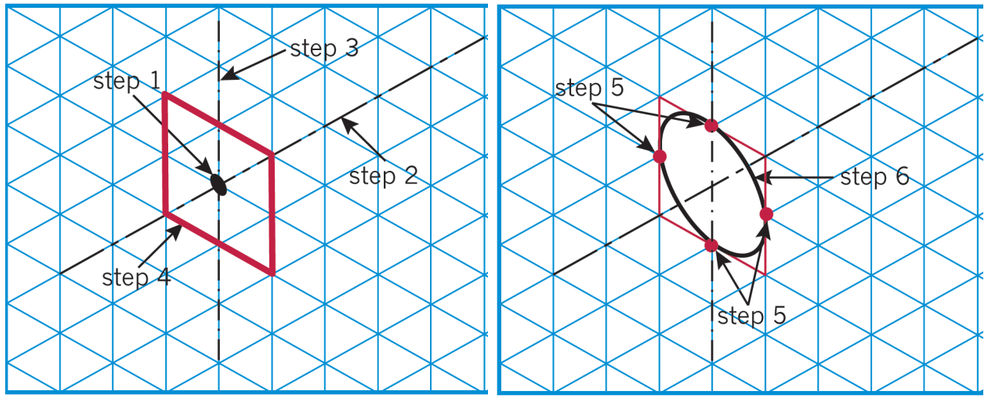

Figure 16 A and B: How to draw an isometric circle

LB page 189

Step 7: Now see if you can draw one for yourself. Copy the diagram in Figure 17 onto isometric grid paper.

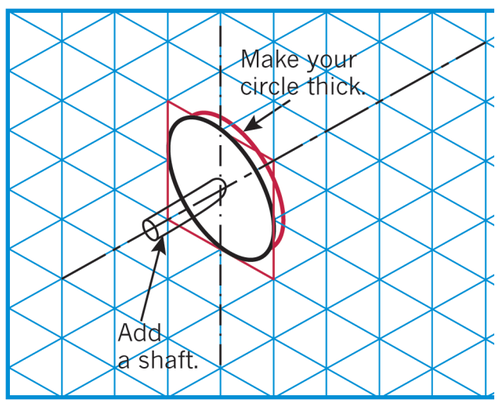

Figure 17

Draw the gear system that you designed for the winch LB p. 189

Look at the picture in Figure 18. Two gears have been drawn in 3D using isometric grid paper. The teeth of the gear are not shown.

1. Use grid paper to help you draw the system you designed for the winch of the tow truck. Draw the gears to the same size as you specified for the winch.
2. Add a table of information to your drawing that gives all the information necessary for someone to make these gears.

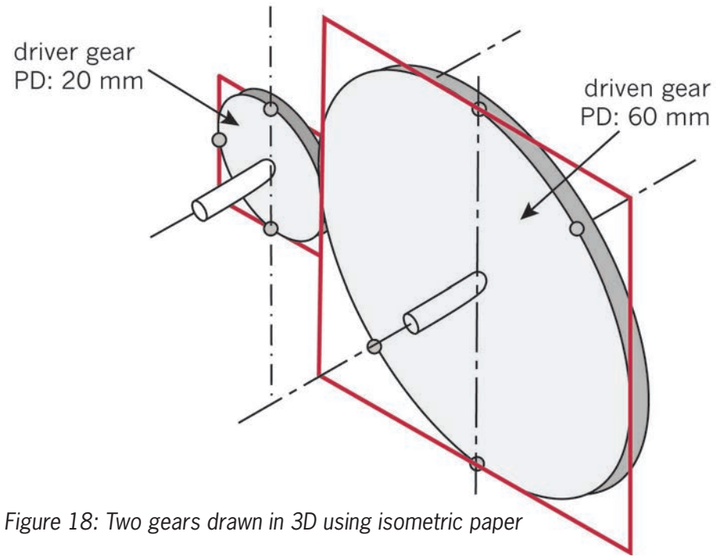

Figure 18: Two gears drawn in 3D using isometric paper

Similar to Figure 18, but with the driver gear with PD = 36 mm, and the driven gear with PD = 107 mm.

LB page 190

Next week

Next week, you will investigate a type of gear called bevel gears. You will look at the gears on a bicycle and learn about chain and belt drives. Then you will learn how to analyse gear systems using the systems approach.

Chapter 14
Bevel gears, bicycles and systems diagrams

LB page 191

In this chapter, you will learn how to draw bevel gears. We usually draw bevel gears from the side to show how the driver gear changes the direction of the driven gear. Then you will look at the gears on a bicycle. You will analyse which gears give a speed advantage, and which gears give a mechanical advantage.

Then you will use the systems approach to draw gear systems and show how an input speed is changed by a gear system into a different output speed.

14.1 Sketching bevel gears 235
14.2 Chain drives 237
14.3 Gear systems diagrams 240



Figure 1: A photograph of the chain drive of a bicycle

14.1 Sketching bevel gears

In this section, learners sketch a system of two identical bevel gears by making a free-hand copy of a given accurate drawing. They then do the same for a bevel gear system where the two gears have different sizes, so that there is a mechanical advantage.

Then they make a sketch of two gear systems that are combined. The one is a bevel gear system, and the other is a spur (or straight) gear system. They determine the mechanical advantage of each of the gear systems on their own – those are the easy questions.

Then they have to determine the overall mechanical advantage of the two systems together – that is the difficult question (question 4). At this time, some of the learners may not be able to answer that, as they have so far never learnt how to do that. That is not a problem at this point, and you should not try to correct or teach learners about this now. After learners have been introduced to the 'thinking tool' of systems diagram in section 14.3, they can then use that tool to help them answer this last difficult question.

14.2 Chain drives

For this section, it is very important that you or one or more learners bring one or two bicycles to class. Ideally, it should be one racing bicycle with many gear choices, and one mountain bicycle with many gear choices.

Learners first learn the names for the different parts of a bicycle chain drive (or chain gear system).

Then they choose the gear combination of the bicycle that will make it the easiest to pedal (that means to pedal with the smallest force). They practically determine how many times the wheel rotates when the crank is rotated once. This is a practical measurement of the speed advantage when the bicycle uses that gear combination.

For a racing bicycle, the speed advantage will be bigger than 1. For most mountain bicycles, the *speed advantage* will be smaller than 1. So, on the mountain bicycle, you get a *mechanical advantage*, which means the output turning force is bigger than the input turning force (a mechanical advantage bigger than 1). Whereas on the racing bicycle, you get a *speed advantage*, which means the output turning force is smaller than the input turning force (a mechanical advantage smaller than 1).

Once learners have finished answering the questions individually, you may ask them to work in groups to discuss why they think the mountain bicycle was designed to give a mechanical (or force) advantage, and the racing bicycle not. You may finish with a whole class discussion. Hopefully, some learners will say that mountain bicycles need a mechanical advantage because they are used to cycle up steep slopes. So, a mountain bicycle needs a mechanical advantage to make the input force lighter to pedal up a steep slope.

In the group and class discussions, learners may become confused between the everyday language of talking about 'high' and 'low' gears, and the scientific language of talking about a big or a small *value* of the *gear ratio*. The gear ratio is the same as the mechanical advantage. It is very important that you *prepare to help learners overcome such confusion*. You should read the following again:

- The teacher notes on "Talking about gears in everyday language, and calculating gear ratios" in Term 1 Chapter 5.
- The teachers notes on Term 3 Chapter 12 section 12.3.

14.3 Gear systems diagrams

In this section, learners see how a 'systems diagram' is a 'thinking tool' that makes it easier to think about complicated machines. A systems diagram helps you to focus on the *effect* of a mechanism, without showing the mechanical details of how that effect is achieved.

It shows only the input, the output, and how the input properties are changed into the output properties. A systems diagram is a type of 'schematic representation'. It does not show how things *look*, but rather shows what the effects of processes are, or how outputs depend on inputs.

This section gives only a very simple introduction to systems diagrams. Learners will use systems diagrams again in Grade 9, and then apply systems diagrams to processes other than gear systems.

After learners have completed the few questions in this section, you can help them gain a deeper understanding of the usefulness of systems diagrams. You can do this by showing learners how a systems diagram can be used to solve question 4, in section 14.1, on page 193. The question is to determine the *overall* mechanical advantage of the two *combined* gear systems. The systems diagram below explains this.

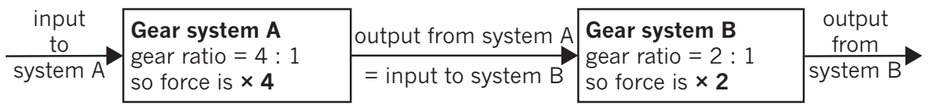

By looking at this systems diagram, it is easy to see that the input turning force is first multiplied by 4. The result (or output) is then multiplied *again* by 2, to give the final output turning force.

So, the turning force is multiplied by 4 × 2 = 8.

So, the overall mechanical advantage is 8.

14.1 Sketching bevel gears

LB page 192

Do you remember learning about bevel gears in Chapter 11? You learnt how bevel gears were used on a hand drill. Bevel gears are used when we want to change the direction of turning.

Look at Figure 2. It shows how you would draw two bevel gears of equal size.

When you turn the driver gear at the bottom, the driven gear rotates at the same speed. But the direction of rotation is turned through 90°.

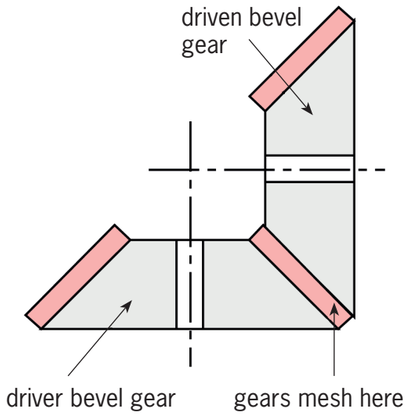

Figure 2: How to draw two bevel gears of equal size

Sketch the bevel gear system LB p. 192

1. Make a sketch of the system shown in Figure 2.

   The sketch should resemble Figure 2 and include the labels. It should be a hand-drawn sketch (drawn without using a ruler), so it does not need to be neat and accurate.

Changing the speed of a bevel gear LB p. 193

The driver gear and the driven gear of a bevel gear system do not have to be the same size.

If the driver gear has a pitch diameter of 50 mm and the driven gear has a pitch diameter of 100 mm, the driven gear will turn slower than the driver gear. This system will give you a mechanical advantage.

1. Study Figure 3 and then make a sketch of the system shown.

The sketch should resemble Figure 3 and include the labels and dimensions. It should be a hand-drawn sketch (drawn without using a ruler), so it does not need to be neat and accurate.

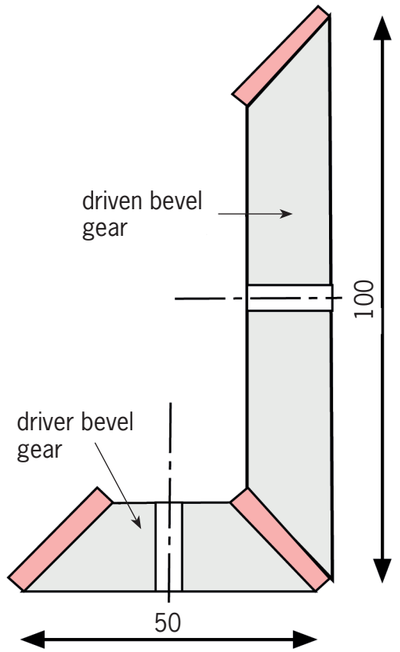

Figure 3

Sketch a bevel gearbox system LB p. 193

Figure 4 shows a speed-reducing gearbox that gives a mechanical advantage. This gear system has a straight gear system and a bevel gear system.

1. Make a 2D sketch of this system. Draw the straight gears as rectangles and the bevel gears like those shown in Figure 3.
2. What is the mechanical advantage between the driver gear A and gear B?

   4
3. What is the mechanical advantage between gear C and the driven gear D?

   2
4. Calculate the total mechanical advantage between the driver gear and the final driven gear.

   2 × 4 = 8

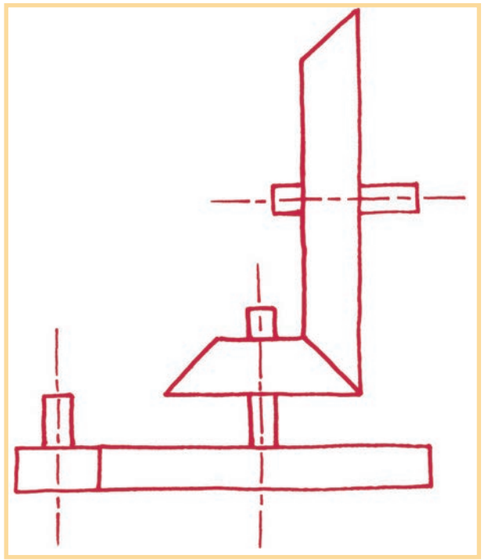

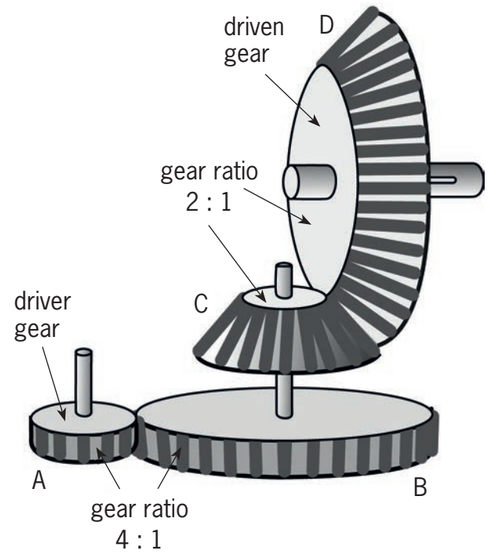

Figure 4: A straight and a bevel gear system

14.2 Chain drives

LB page 194

In this activity, you will investigate the gears on a bicycle. You will learn about chain drives and how they are like gear systems that have an idler gear.

Look at Figure 5. It shows the gear system on a modern bicycle.

When you ride a bicycle, the pedals push the cranks around and around. The chain wheel turns together with the cranks.

Attached to the chain wheel is the chain. When a cyclist pedals, the chain is pulled around in a clockwise direction.

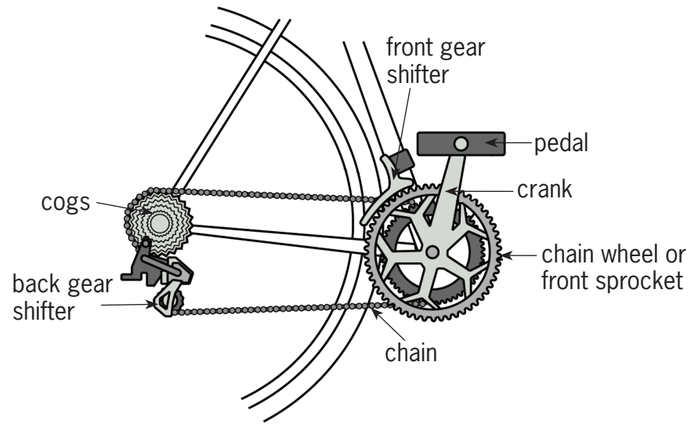

Figure 5: The gear system on a modern bicycle

The chain meshes with the gears on the cogs, which are attached to the back wheel. The gears make the back wheel turn and the bike moves forward.

Questions LB p. 194

1. What do you call the large gear wheels at the front that are turned by the pedals?

   chain wheels or front sprockets

2. What do you call the group of gears that turns the back wheel?

   cogs

3. What connects the front gears to the back gears?

   a chain

4. What do you call the mechanism that changes the gears?

   a gear shifter or a derailleur

Investigating the chain drive of a bicycle LB p. 194

Bring a bicycle with gears into your classroom. Turn it upside down so that you can investigate how the gears work. Stick a piece of tape somewhere on the wheel. This will help you to count how far the wheel rotates for each pedal rotation.

Use the front gear shifter to put the chain onto the smallest gear of the chain wheel. Use the back gear shifter to put the chain on the biggest cog at the back.

1. Count the number of teeth on the smallest gear of the chain wheel and write it down.

   For a mountain bicycle, this is between 22 and 28.
   For a racing bicycle, this is between 34 and 44.

2. Use the back-gear shifter to put the chain onto the largest cog on the back wheel. Now count the number of teeth on this gear and write it down.

   For a mountain bicycle, this is between 28 and 40.
   For a racing bicycle, this is between 22 and 32.

LB page 195

3. If you rotate the crank by exactly one revolution, how many revolutions does the wheel make?

   For a mountain bicycle, the answer will be between 0,5 and 1.
   For a racing bicycle, the answer will be between 1 and 2.

4. Will this gear position give you a speed advantage? Explain why you say so.

   If the answer above is smaller than 1 (for a mountain bicycle), there will be no speed advantage since the wheel turns slower than the crank.
   If the answer above is bigger than 1 (for a racing bicycle), there will be a speed advantage since the wheel turns faster than the crank.

Advantages of using a chain drive rather than spur gears

- Chain drives can easily and cheaply connect gears that are far away from each other.
- A chain can be adjusted easily if the distance between the axles of the two gears changes.
- With spur gears, the axles need to be aligned precisely, so that the gears mesh well but without too much resistance. With a chain drive, the axles do not have to be aligned precisely because the chain can bend sideways a little.

14.3 Gear systems diagrams

Sometimes a diagram of a mechanical system can be very complicated. Systems diagrams are simpler diagrams. A systems diagram does not explain how the system works. Rather, a systems diagram describes the input, process and output of a system. Have a look at Figure 6 below. It is a systems diagram for a bicycle.

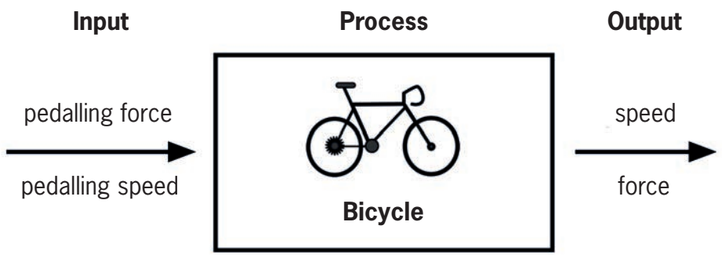

Figure 6: A systems diagram for a bicycle

LB page 196

Input, process, output

Have another look at Figure 6 and read the information below. It tells you how this systems diagram for a bicycle works.

> On the left, there is the input to the bicycle. The input is what you put into a bicycle when you ride it. It is the pedalling force and the pedalling speed.
>
> In the process box in the middle is the bicycle. The chain drive of the bicycle changes the input pedalling force and pedalling speed into an output.
>
> On the right is the output. This is what you get out of a bicycle, which is speed.

A systems diagram shows how a system will change inputs into outputs.

When you change the pedalling force or the pedalling speed on a bicycle, the output speed will change. The systems diagram will help you to work out how these will change.

Draw systems diagrams of gears and drives

You can use systems diagrams to represent gear systems instead of drawing them. Look at the systems diagram in Figure 7. This systems diagram gives more information about the bicycle chain drive than the simpler systems diagram in Figure 6.

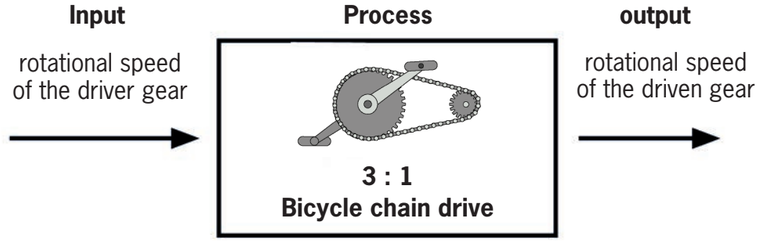

Figure 7: A systems diagram for gears

The system in Figure 7 gives a speed advantage of 3. You can use the diagram to work out what the output speed will be if the input speed should change.

If the input rotational speed of the cyclist on the pedals is 80 rpm, then the rotational speed of the wheel will be 240 rpm.

A winch for a mine

LB p. 197

A winch is used for a lift in a mine. The winch consists of an electrical motor and a winch drum on which cable is wound.

The winch must be able to lift 10 000 kg of mined rock. If the motor is connected directly to the winch drum, without a gear system, the winch can lift a maximum of 2 000 kg.

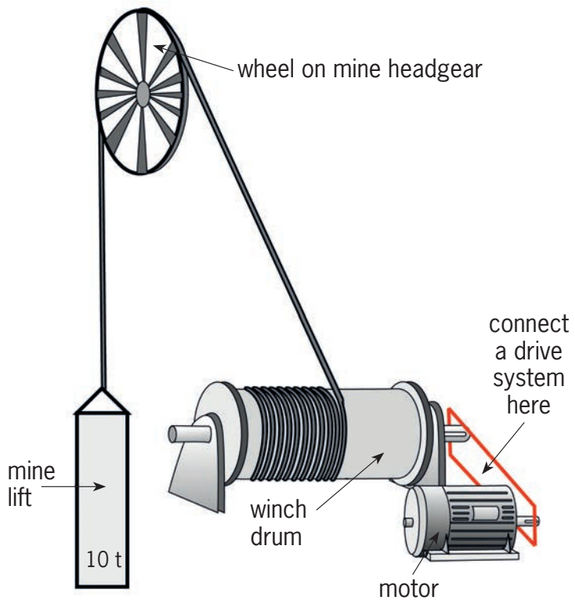

Figure 8: A winch for a mine

1. Calculate the mechanical advantage needed from a gear or chain-drive system to enable the winch to lift the load of mined rock.

   mechanical advantage = output force / input force = 10 000 kg / 2 000 kg = 5

2. Copy the drawing below. Sketch a drive system to show how the motor will make the winch turn.

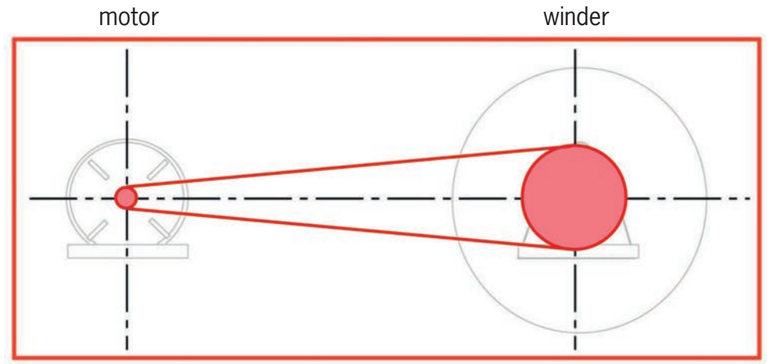

Figure 9

LB page 198

Next week

Next week, you will research a topic about the impact of mining on people and the environment, and give a presentation on that topic. Your teacher will divide you into teams today, and give each team a topic. There will not be a lot of time next week to prepare for your presentation, so it is very important that you start your preparation now. Read the article on your team's topic in Chapter 15 during the weekend.

Chapter 15
Investigate aspects of mining in South Africa

LB page 199

The mining industry is one of the most important contributors to the economy in South Africa. In this chapter, you will learn about the history of mining in South Africa, as well as the impact that mining has on communities, social life and the environment.

Four topics about mining are discussed in this chapter. You will work in teams, and each team will investigate only one of these topics, then give an oral report to the class on your topic. You will work in teams of three or four, and there must be at least one boy and one girl in each team.

15.1 Background information on different mining topics 248
15.2 Team discussions and preparation of reports 261
15.3 Presentation of reports 264



Figure 1: The oldest iron mine in the world – Lion Cave in Swaziland

Materials required for this chapter:

Learners need sufficiently big sheets of paper for notes and drawings that they will use during their team presentations to the class, at the end of the week.

Homework for the week before: Allocating topics to learners and teams

Each learner is required to read and analyse one of the four topics on mining. These topics should be allocated to learners in the week before they start with this chapter. Learners have to prepare for this chapter by reading up on their allocated topics before the start of this week, as homework.

It is important to achieve a reasonably equal spread of learners across the topics, so that each topic will be represented by enough learners. Learners will present their research as teams of two or three learners each. They will present their research in the last 60 minutes of the week.

Once topics are allocated, learners allocated with the same topic should form teams. A class of 40 learners might be grouped in the way shown on the diagram below.

It may save time to instruct learners on what their topics are, and who should be in what team, rather than letting them choose themselves.

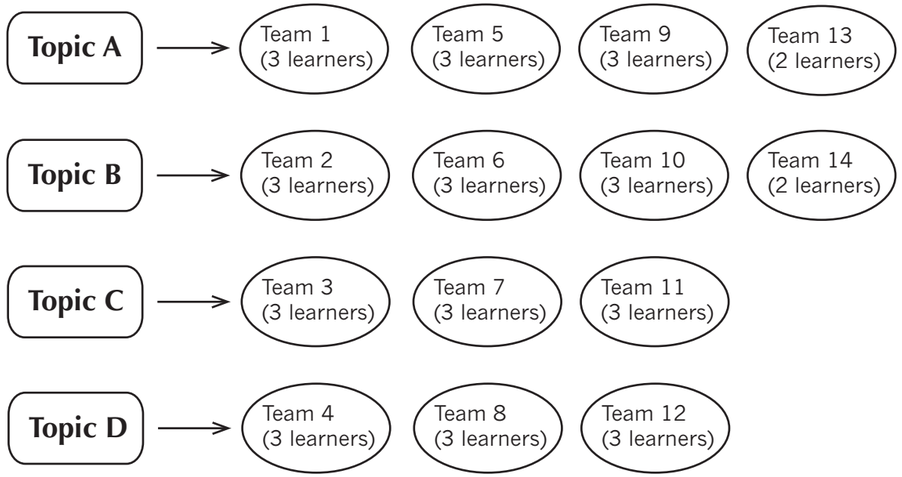

This chapter requires learners to read, investigate and communicate information about historical, social and environmental aspects of mining. They will be working as teams, to divide the work, to share ideas, and to support one another. Only the first lesson will be individual work.

15.1 Background information on different mining topics

When learners arrive for this lesson, they should have already read the information on their topic. They will be working individually with the text and preparing for the next lesson, when they will use this information to compile a group presentation to the rest of the class.

It is important to structure the exercise so that learners know what they should achieve during the lesson. The notes that each learner will make during this lesson must include the following (you may wish to modify or add to this list):

- a framework or summary of key ideas that need to be included in a presentation about the topic to other learners,
- a list of words that other learners may not understand and that will need to be explained,
- a list of ideas or questions about which it is necessary to find more information, and
- a description of any diagrams, tables or charts that might be useful to explain ideas and concepts when the team reports on this topic.

For homework, learners should find more information about their topic, for example by looking in books, asking older people and looking on the internet. You can help learners in doing this by making resources such as the following available to learners:

- dictionaries – the most important!
- photocopies of newspaper articles that have to do with the topics
- a list of appropriate websites to consult (optional)
- books, posters or video material about the topics (optional).

15.2 Team discussions and preparation of reports

In this lesson, learners work in their teams to:

- answer questions that help them to think critically about their topics,
- discuss the issues each member has identified as important in presenting the team's final report,
- decide on what to include in the presentation, and what not, and
- allocate tasks to each member. Each member of the team should contribute to the preparation of materials for the presentation, and play a part in presenting the material.

You should move around the class during this lesson, speaking to teams and making sure that they are preparing their presentations well. In the last five minutes of the lesson, explain how the presentations at the end of the week will be organised. Consider the following factors:

- Learners need to know that diagrams, notes, key words and illustrations that are intended to support the presentation must be prepared before the team begins their presentation.
- How much time will be allocated to each team's presentation? In a class with 12 groups, not more than 4 minutes can be allocated to each team (12 × 4 minutes = 48 minutes).
- Will other learners be allowed to ask questions at the end of each presentation, or will questions only be allowed when all the teams have finished their presentations?
- Tell learners how you intend to assess their presentations. Explain what notes and materials you want each team to hand in after the presentations. Explain what other features of the presentations you will use as part of your assessment.

15.3 Presentation of reports

Begin promptly. Allow each team to only present for the agreed number of minutes. Don't allow learners to waste time while a new team moves to the front of the class to give their presentation.

If there is time at the end, allow questions.

You should take notes while the teams give their presentations. You can give a mark for each criterion used. It would be helpful to prepare an assessment schedule for this purpose.

Criteria for assessment might include:

- Has the team thoroughly grasped the issues outlined in the topic?
- Has the team presented some valuable additional information that is not in the article that they read in the learner book?
- Has the team used each member effectively in giving his or her presentation?
- How well has the team used supporting materials such as notes or drawings in their presentation?

LB page 200

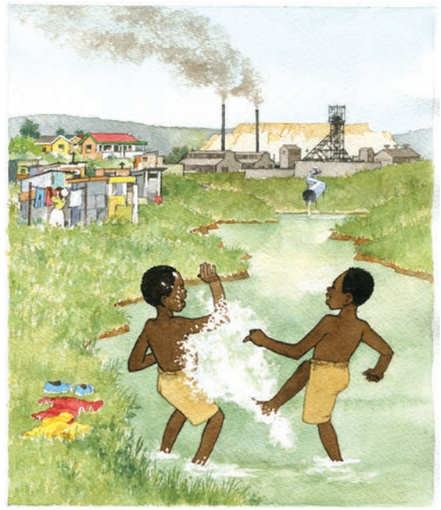

Figure 2

15.1 Background information on different mining topics

Your teacher will divide your class into different teams, and tell each team which topic they need to investigate during this week. Each team will only investigate one of the following topics:

- The impact of mining on the environment: Acid mine drainage
- The impact of mining on the environment: Dust pollution
- Indigenous mining in South Africa before the modern era
- The equality or inequality of job opportunities in mining for men and women

In this lesson, you will work individually and read an article about the topic that your team will investigate. After reading the article, you should make notes in your notebook. Write down the points that you think are most important, as well as the points on which you would like to get more information. For homework, you should find out more about these topics, for example by looking in books, asking older people and looking on the internet.

The four different articles are given below. Remember that you should only read the one article that is about the topic your team will investigate.

Topic A: The impact of mining on the environment: Acid mine drainage

Mining is very important to South Africa. The mining industry has led to our country becoming very important as a provider of metals and **ores.** South Africa is one of the biggest producers of precious metals such as gold and platinum, and the country also has large amounts of iron, zinc, chrome and copper ore that are very important to many of our factories. Coal is also mined and this mineral provides the energy for many of our power stations.

An **ore** is a type of rock that contains important minerals, including metals. These ores are mined and then refined to extract the valuable material.

Because mining is such a large industry, it also provides employment for large numbers of people, both skilled and unskilled.

But, like any industry, it is also a cause of problems due to the way the ore is being mined. Before you investigate these problems, you need to understand a little about the mines themselves. Some mines are known as opencast or surface mines. These are mines where the workers do not have to go underground, but instead dig a very large hole to remove the ore after stripping off the surface material. These mines are easier to work on. Coal mines and iron ore mines are often opencast mines, as coal and iron ore are closer to the surface than precious metal ores, such as gold.



Figure 3: An opencast or surface mine. Note the water collecting in the hole.

Underground mines are mines where shafts and tunnels have to be dug to reach the supply of ore that is being mined. All of South Africa's gold mines are underground mines, with shafts that are sometimes kilometres deep. The deepest mine in the world is the TauTona mine in Carletonville, South Africa: it is nearly four kilometres deep! Mining is dangerous work, and there are very strict safety precautions on all mines.



Figure 4: The headgear of an underground mine. The shaft goes straight down into the ground under the wheels of the headgear, sometimes kilometres deep.

One of the problems with mining is that eventually the ore, or metal, will run out. When this happens to a very big mine, what is left are many kilometres of underground tunnels. It is impossible to fill these tunnels because the ore that was mined has been processed to remove the valuable mineral. What happens normally is that the mine entrance is sealed and the tunnels are left as they were during mining. But they don't stay empty.

If you have ever dug a hole in the ground near a river, or on a beach, you will know that water soon starts gathering at the bottom. This happens when you have dug deeper than the **water table.**

The **water table** is the level in the ground where enough water is present to flow.

All mines that are underground will be dug beyond the water table. While miners are working underground, large pumps are constantly pumping the water that gathers in the tunnels out of the mine. But once the mine is abandoned, the pumps are removed and the water starts to build up, exactly as it would in the hole you dug.



Figure 5: Holes dug in the ground often go below the water table, and then the hole fills with water.

It would be fine if this water just filled the mine, but a **chemical reaction** occurs as the water drains through the rocks into the mine. The water reacts with chemicals in the ground that contained the ore, and turns into an acid. Acids can be very destructive in the wrong environment.

A **chemical reaction** takes place when materials react with other chemicals and a change occurs to the molecules of the materials, forming new substances.

You come across mild acids every day. Try this experiment:

At home, pour yourself a glass of water, and then add one teaspoon of vinegar and stir. Take a sip. It is healthy, but for most people it tastes too strong, as if it is burning your mouth and throat.

Now pour yourself another glass of water. This time, add three teaspoons of vinegar to it and stir. Now drink a little bit from this glass as well. Could you taste the difference? Scientists would say that the first glass of water was slightly acidic, and that the second glass of water was more acidic.

The acid that is produced in mines is a lot stronger than your vinegar water! The water has mixed with sulphides and can eat away solid metals and stone. It is very poisonous to plants and animals.

Acidic liquids are very corrosive. They can destroy solid materials.

It would be less harmful if the acid water stayed in the mine, but due to many reasons the acidic liquid often leaks out. In some cases, the water level in the mine rises to the level of the surrounding water table, and then the acid pollutes all the water in that area. In other cases, the surface of the mine is higher than surrounding areas. Remember that most of the gold mines in Johannesburg were on a ridge. The acidic liquid will flow out of gaps in the rock like an ordinary spring, and pollute the rivers and streams it enters, killing fish, animals and plants.



Figure 6: Acid mine drainage is ugly, poisonous and smells bad.

When large mines, such as the gold mines in Gauteng, are closed, acid leaking from the mines can cause many problems for the surrounding environment. If these problems are not solved, people living in the area will have to leave their homes and move to another area that is safer.

The gold mines in Gauteng are located on the Witwatersrand, or the "White Water Ridge". Rivers flow away from each side of this ridge, and are easily polluted.

LB page 205

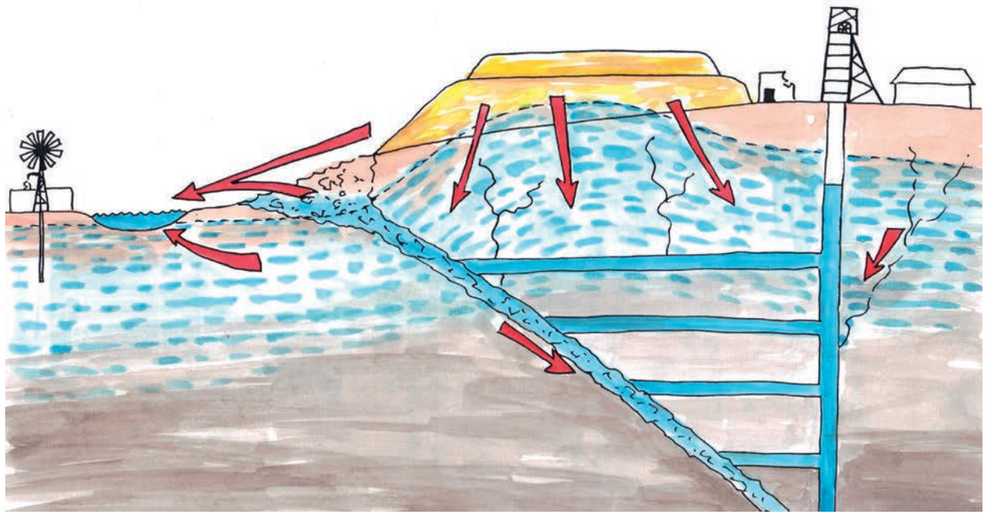

Figure 7: This illustration shows how water in the water table can fill up mines when they aren't being pumped dry.

Notes: Acid mine drainage

Learners' own notes, for example:

The main points of the article:

Mining has many positive impacts, such as producing useful metals and creating jobs.

But mining also has negative impacts, such as acid mine drainage, which pollutes underground water, rivers and streams.

Reasons for acid mine drainage: Water fills underground mines when they are not being used. This water reacts with the exposed rocks in the mine's tunnels and shafts, and becomes acidic. This water leaks into the water table.

Examples of acids at home are vinegar, lemon juice, acid in car batteries (which is very dangerous), etc.

Questions to investigate:

Does acid mine drainage have an effect on man-made things such as buildings or pipes? For example, does it affect steel water pipes or the concrete foundations of buildings?

Possible experiment to do at home:

Put an iron nail and a piece of cement in vinegar for a week and notice if anything happens.

Topic B: The impact of mining on the environment: Dust pollution

Anyone who has been to Johannesburg will know the mountains of yellow and white sand that comes from the mines. These are called mine dumps. What are these dumps actually made of, and why do they exist?

Ore has to be crushed and then treated with chemicals before the metal in it can be dissolved. After this, the chemical that contains the dissolved metal is separated from the waste material, then more chemicals are added and the metal is recovered. The metal is then melted and poured into large ingots, or bricks, of metal that can be transported to the factories that will use them.

But what remains? All the crushed ore and chemicals that have been used to extract the metal become waste material that has to be stored. It can't be put back into the mine since people are still working there, so it is either put into large dams, or piled in dumps. The waste material is normally a mixture of water, dissolved chemicals, and finely ground dust or small particles. This is called "slurry". The slurry has to dry in the open air. A ton of gold ore only produces a gram or two of gold, so a lot of slurry is left after extracting the gold.

Many of the chemicals added to extract gold are still in the slurry, and some of them are very poisonous, such as cyanide.

The compounds in the slurry are ground to fine sand. Once the water dries, it leaves a layer of tiny particles that can easily be blown around.

LB page 206

When gold mines in Johannesburg first started producing waste material, the slurry was pumped into storage dams. After a while, as the slurry dried and more waste material was produced, the dams grew upwards into dumps. The centre of these dumps was lower than the outside, so that more slurry could be pumped into the middle. The slurry was then pushed out towards the edges as it dried, leaving more space in the middle. These dumps grew into the huge mine dumps that line the mining areas of Johannesburg.

It is not just gold that produces mine dumps. However, since the old gold mine dumps in Johannesburg are so close to communities living there, it is a very noticeable problem. Other mining towns and cities have similar problems. When new mines start, people working at the mines often build houses nearby, and often a whole town develops around a mine.



Figure 8: Dust blowing off mine dumps can affect people and the environment.

In the early days of mining, the impact of mine dumps on the environment was not known. Once people became aware of the negative effects of the dust that comes off these mine dumps, they started looking for a solution to this problem. First, trees and grass were planted on the mine dumps to prevent the wind from blowing the dry dust into the towns.



Figure 9: A mine dump planted with trees and grass to reduce dust pollution.

LB page 207

But because of the toxic chemicals in the dumps, the trees and grass did not grow very well. Later, mining companies started to extract any remaining gold from the waste material in these mine dumps. Since the process used to extract gold a hundred years ago was not very effective, a lot of gold remained in the waste material. Once they processed these mine dumps to extract any remaining gold, they removed the dumps altogether. The remaining waste material was then stored where it could not be blown into nearby towns or cities.

Notes: Dust pollution from mine dumps

Learner's own notes, for example:

The main points of the article:

Mining communities (towns and cities) develop around mines.

The waste materials from mines were left on dumps (in the past). The materials are often toxic and contain very fine dust that can easily be blown around, causing health problems for humans, animals and plants.

People have developed solutions, such as planting grass and trees on mine dumps, to prevent the dust from blowing away, or removing the dumps altogether to store the waste materials in a safer place.

Question to investigate:

Where and how can the waste material from mines be stored so that it will not have negative effects on humans or the environment?

Topic C: Indigenous mining in South Africa before the modern era

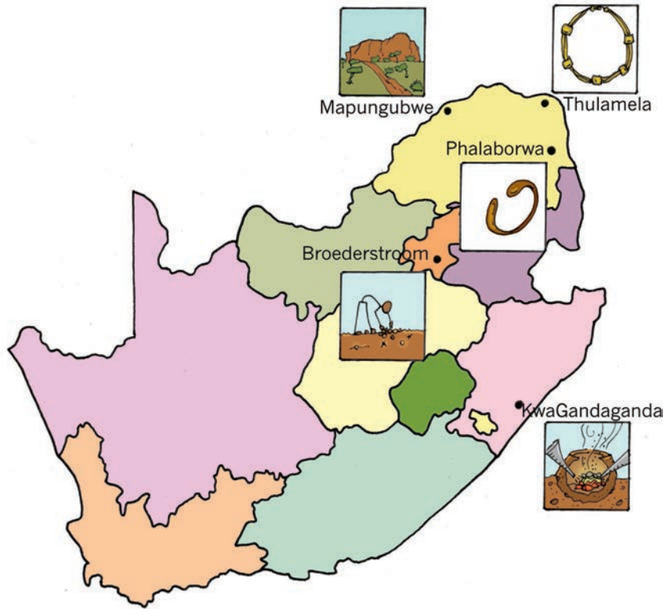

Figure 10: Locations of a few mining sites in South Africa during the Iron Age.

The history of South Africa is closely linked to mining. Gold and diamond mining has generated much wealth for the country over the last 150 years. The mines in South Africa today produce gold, diamonds, silver, platinum, chromium and many

other minerals. In 2010, South Africa produced 15% of the world's gold, and 78% of the world's platinum supply.

But mining was already important in southern Africa more than a thousand years before that. The period in history when people started to use iron implements and tools for the first time, is known as the Iron Age. The ability to **smelt** ore and make iron tools was discovered in north Africa. Some of these communities moved southwards to find better rainfall and more productive land to provide crops.

Smelting is the process where ore is melted in a very hot oven called a "furnace", to separate the iron from the rest of the ore.

From about 1 800 years ago, the areas where people coming from the north would settle was influenced by the discovery of iron ore deposits. Even **nomads** would settle near a source of iron ore and plant crops such as ground beans, sorghum and millet.

Nomads are people who have no fixed homes, and move from place to place in search of water and food.

This would lead to an increase in cattle and other stock animals, and often the community would grow and prosper in that area. They would stop their nomadic lifestyle and stay in one place to build a community. However, sometimes they would have to move to a different area due to drought or poor soil. Other groups were not as fortunate to find deposits of iron ore, and so continued moving south as well. With these groups of people continually moving south, the knowledge of how to smelt iron came to the country that is now known as South Africa. Historians and geologists have found many places in our country where Iron Age settlers lived and built their smelting ovens. Studying these places has helped us learn more about the history of these people.

The Iron Age people also knew how to make pottery by baking clay. The styles of pots and artwork found at these Iron Age sites have helped historians to determine the general date when these sites were occupied. Iron Age people built huts and cattle kraals as well, and these ruins have been studied in places right across the country, from Mpumalanga to the Kei River.

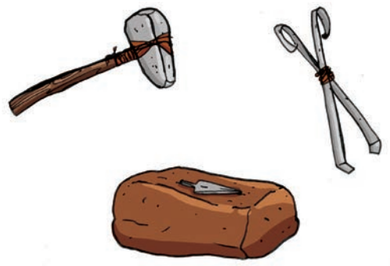

Figure 11: Typical Iron Age tools: simple, but efficient

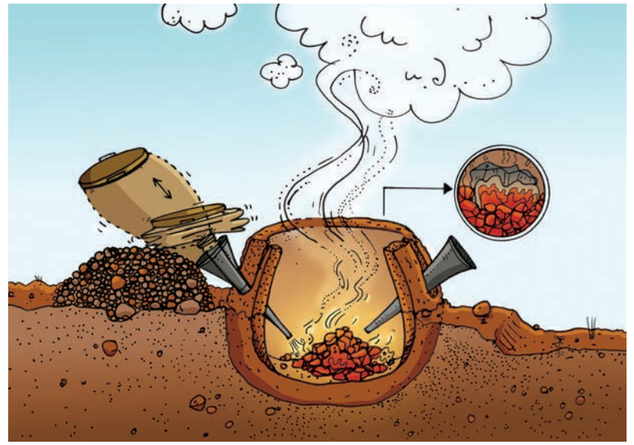

Figure 12: Illustration of how an early iron smelter was constructed and used

Initially, iron ore deposits were discovered by the Iron Age settlers where the deposits were exposed by soil erosion. Soon the settlers learnt how to find sources of iron ore by studying the different types of rock in the area and comparing it to other sites where they had found iron ore. About 1300 years ago, holes and shafts were being dug to find more ore. A lot of trees were required near the iron ore deposits, as the smelting process required a lot of charcoal to provide enough heat. A supply of fresh water was also important.

The process of smelting ore was regarded as a secret to be kept by the older men of the community. They would build a clay oven that had a small hole at the top as a chimney, and three or four other holes on the side where air could be blown in. To smelt the ore, it would be placed in the oven in layers of ore and charcoal, then the charcoal would be set alight and a lid would be placed over the burning fire. The men used "bellows" made of soft goat's or sheep's skin to continually blow air into the oven to create the high temperature needed to smelt the ore. This could take many hours, often a whole day or night. When the charcoal was finally burnt out, the oven would be opened and a lump of iron removed.

This lump would be heated over another fire and hammered into the shape of the tool or implement required. It was a difficult process, but it changed the way the people lived at that time, and so it is one of the most important eras in our history.

Notes: Iron Age technology

Learner's own notes, for example:

The main points of the article:

South Africa is very rich in terms of the amount of metals and minerals that can be mined.

Iron mines were already built here 1 300 years ago, to obtain the iron for making tools and implements.

Communities migrating from northern Africa to southern Africa brought with them the knowledge of smelting iron ore to obtain pure iron.

Question to investigate:

Nowadays, one of the main uses of precious metals, such as gold and platinum, is for jewellery. Were minerals also used for jewellery during the Iron Age?

Are there any Iron Age mining sites close to where you live, or have you been in other parts of the country where there are such sites?

LB page 210

Topic D: The equality or inequality of job opportunities in mining for women and men

Discrimination against women has been an ongoing struggle across the globe for centuries. Women were, and in some countries are still, mostly seen as second-class citizens under the control of their fathers, husbands or other male members of their family. Women were expected to stay at home, clean and cook for the family, and raise the children, often without any help from men. Very few women received a proper education or were allowed to work for money. Those who did work, mostly did only part-time jobs and for little money. They often got married and/or had children at a young age, before they could study to qualify for higher-paying jobs.

There were many women who fought hard for the rights of all women, including the right for women to vote in elections. In many countries, women were first allowed to vote only about 80 to 100 years ago, because many men thought women were not clever enough to vote. Many of the protesting women were put in jail and even mistreated for their actions.

For us to understand gender bias, we have to understand that it develops from a very young age. Girls are often taught that they cannot do what boys can, but is this the truth? For instance, boys play with toy cars and girls play with dolls. This often leads to the mistaken ideas people have about adult men and women. Many people still think that women are more emotional than men, have to be pretty, have to be willing to have children and have to care for their families. And many people still think that only men can be physically strong, that only men are clever and hard-working enough to do jobs with a lot of responsibility, that a real man does not show his emotions and that a husband has to only contribute financially to his family.

But what is gender bias in work situations? It is when one gender is perceived to be superior to another, and this gender is given more or better employment opportunities as a result. During the twentieth century, a lot of research was done on the physical and mental abilities of men and women, and it was proven that men and women are equally capable of doing most jobs. There have been changes in laws that prohibit discrimination on the basis of gender, and as a result the number of women in the workplace has increased rapidly.

LB page 211



Figure 13: Men and women share duties above ground at modern mines.

So, when you think of people working in mines deep underground, what picture comes to mind? You probably see a man, physically strong and holding a drill in a dark hot tunnel. Why do you not see a woman holding a big drill, deep in a hot dark tunnel?

Until the early 1990s, women in South Africa were prohibited from working in underground mines. Since 1994 there have been numerous changes to the laws in South Africa to reduce and remove gender and racial inequalities within different industries. The mining sector was one of them, but statistics show that gender equality is not happening as quickly as it should be. Even today, only 5% of mineworkers in South Africa are women, and the majority of these work in offices as clerks or administration officials. Very few women work directly with the physical extraction of minerals. There are, however, many women involved in informal mining, such as extracting coal, clay, copper and other minerals for the sake of their own and their families' survival. This proves that women are

physically capable of doing the job, even though they are not employed as physical workers.

These days, anyone who wants to work underground can do so, but they have to pass a fitness test first. This test is not only for strength, but for stamina as well. Stamina refers to the ability to do physical work for a long period of time without harming your body. In addition, the miners have to pass a **heat-tolerance test**, and it has been discovered that women can handle high temperatures better than men!

A **heat-tolerance test** is used to make sure that people can handle long periods working in high temperatures. The temperature in an underground mine is much hotter than at the surface.

LB page 212

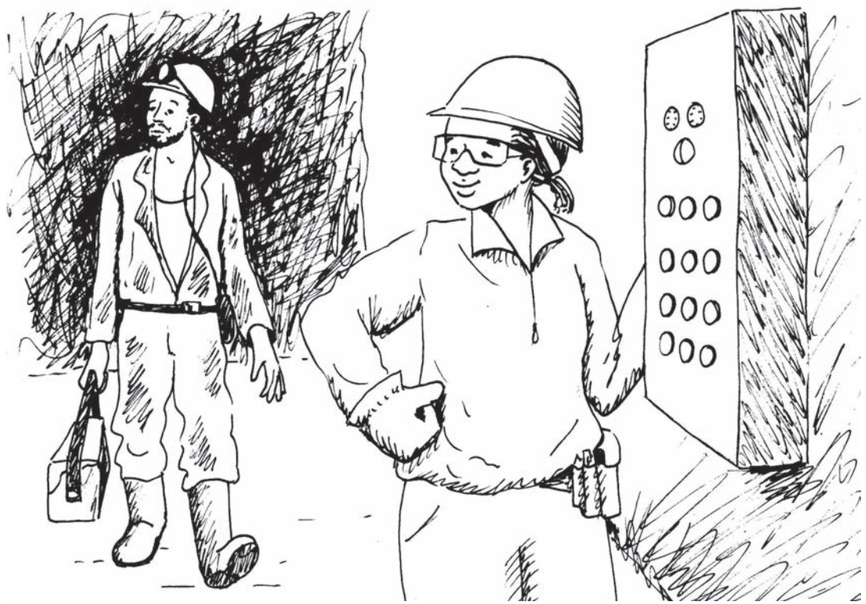

Figure 14: Women and men can share underground work in mines.

So it doesn't matter if you are a man or a woman, if you pass the test, you can work underground, mining ore.

Another area where a bias has been noted is in the payment for work done. Although women are doing the same job as men, they are being paid less than their male counterparts. This practice is called wage discrimination, and there are also laws against this type of unfairness. However, because some women are desperate for work, they have no choice but to accept lower wages.

Aside from wage discrimination, there are many reasons why women are still not working in the formal mining sector to the same extent as men. For example:

- low levels of training amongst women, specifically a lack of technical training,
- unsupportive work cultures in the mining sector, despite changes in law,
- a lack of mentorship and facilities,
- the physical nature of mining, and
- historical bias against women in the mining industry.

For women to gain better access to careers in the mining industry, the perceptions that men and women have about this situation needs to change. Women have already proved that they are capable of doing the same work as their male counterparts, and therefore they should not only be allowed to do so, but they should also be rewarded and promoted by the same standards.

Notes: Gender bias in mining

Learner's own notes, for example:

The main points of the article:

The physical and mental abilities of men and women are not as different as many people think they are. It is necessary that people start thinking differently about this, in other words change their perceptions. Gender equality is just as important a goal in society as racial equality.

In many areas of employment, gender equality has improved a lot since 1994, but in the mining industry there is still only 5% of female workers.

In some jobs, women earn less than men who do the same job. This is not fair.

Question to investigate:

Make a list of adult women you know who are strong, and another list of adult men you know who are strong. Compare the lists. Are men really that much stronger than women? Are only big people strong?

15.2 Team discussions and preparation of reports

After reading each of the articles in the previous lesson, you were asked to make notes on what you understood to be the main problems or opportunities presented by the topic. You were also asked to find out more about each topic.

You will now work in your teams to prepare a report on the topic allocated to you. This report needs to consider the history and background of the topic. The reports must be informative and, when necessary, need to be investigative. For some of the topics, the team might have suggestions as to how problems can be solved or lessened. These suggestions will form an important part of the report.

Each team will give a short presentation to the class next week. You have this whole lesson to prepare. Each of you has to do a part of the presentation.

To help you prepare your report, some additional questions are given below about the four different topics. Discuss the questions about your team's topic now.

Topic A: The impact of mining on the environment: Acid mine drainage

You are not required to give solutions to acid drainage, as these are very complicated and expensive processes! The purpose of this exercise is to understand how acid leaking from old mines can cause problems, and how communities can take precautions to not be affected by it.

1. What is acid mine drainage?
2. Why do you think it wasn't seen as a problem when the mines were started?
3. What effect can acid mine drainage have on communities, water supplies, houses and other buildings, and on the environment?
4. How can communities affected by acid mine drainage be assisted?
5. Who should be investigating the problem, and who should be assisting with the solutions?
6. What should the mining industry be doing to fix existing problems and prevent future problems?

Learners' own notes.

Topic B: The impact of mining on the environment: Dust pollution

1. Give a short history of why there are so many mine dumps in South Africa.
2. Why do towns develop around mines?
3. How does dust blowing from mine dumps have a negative impact on people and the environment?
4. Why is dust from mine dumps more dangerous than dust from fields?
5. How can dust blowing from mine dumps be prevented?
6. Why is the problem in Johannesburg reducing? Give a few reasons, and then make suggestions as to how you think other communities can learn from Johannesburg's experience.
7. What other ideas does your team have to reduce the problem around the country?
8. When new mines are dug in future, what plans should be made by the engineers to avoid problems with the mine dumps they produce?

Learners' own notes.

Topic C: Indigenous mining in South Africa before the modern era

1. Why is the history of early mining important to understand and study?
2. Why did groups of people from north Africa move southwards?
3. How important was mining as a skill to the migrating people?
4. What resources would the migrating people look for? Why were these resources important?
5. How do we know so much about the Iron Age settlers? What would you look for if you were searching for signs that they had lived at a specific place?
6. How has mining affected the growth of South Africa?
7. What does the future of mining look like?

Learners' own notes.

Topic D: The equality or inequality of job opportunities in mining for women and men

1. What is gender bias?
2. Has it affected the growth of industry and commerce (business) in South Africa, and if so, how?
3. What has been done to change and get rid of gender bias in the mines of South Africa?
4. Does your team think that the changes have been successful?
5. What else can be done to reduce gender bias in mining and other areas in the workplace?

Learners' own notes.

Homework: Prepare to ask and answer questions

Read through all four of the articles given in section 15.1, so that you know the background about the other three topics that other teams will talk about. You will ask the other teams questions after they have given their presentations. Make a few notes to help you.

15.3 Presentation of reports

During the previous lesson, each team spent the lesson preparing an oral report on one of the mining topics. You were all asked to read the articles on the other three topics to enable you to ask questions on the other teams' topics.

Get together in your team first and spend five minutes revising your presentation. You will only have two minutes to do your presentation. You can use visual aids such as a poster to show the class what you mean.

Your teacher will then ask the teams in turn to do their presentations. Remember to ask the other teams questions after they have presented their topics. The idea is not to make them look bad, but to learn from them by asking those questions.



Figure 15: A team giving a presentation to their class, using illustrations and a blackboard to help the speaker.

Homework: Reflect on the weeks' work LB p. 216

1. What was your topic about?

   Learner's own answer.

2. Compare advantages and disadvantages of the mining industry to South African society.

   Learner's own answer.

3. What can be done to improve people's understanding of mining?

   Learner's own answer.

4. What can be done to make mining more beneficial to society?

   Learner's own answer.

Next week

Next week, you will start your Mini-PAT for this term. You will design and build a model of a lifting system for a mine. You will also prepare a tender for building the lifting system.

Chapter 16 Mini-PAT
A mine needs a lifting system

LB page 217

This mini-PAT will run over four weeks. From week 2 in this mini-PAT, you will work in teams. Each team will pretend to be a mechanical engineering company. Each company will submit a tender for the design and construction of a "mine-lifting system", commonly called "mine shaft headgear".

The lifting system is used to take miners underground and back up again. It is also used to lift the mined ore to the surface. After you have designed your lifting system, you will make a model of it. The model will have a mine winch, shaft headgear and a lift cage.

Week 1 273
Investigate: Mine shaft headgear and head frames ..... [7]
Investigate: Mine winches ..... [5]
Design: Design brief, specifications and constraints for a mine shaft headgear ..... [8]

Week 2 281
Evaluate: Choose and combine the best ideas ..... [6]
Make: Sketch your team's final design ..... [5]
Make: Draw your head frame design ..... [4]
Make: Draw your head frame design to scale ..... [5]
Make: Draw your head frame design as a 3D isometric projection ..... [6]

Week 3 287
Make: List of materials and budget ..... [5]
Make: A model head frame ..... [13]

Week 4 294
Make: Complete your model ..... [2]
Communicate: Present your tender ..... [3]
Evaluate different tenders ..... [1]

[Total: 70]

Materials required for this mini-PAT:

unlined A4 paper for sketching and drawing
squared grid paper for working drawings and other 2D drawings
grid paper for 3D isometric drawing
used paper, for example A4 or old telephone directories
thin waste cardboard, for example cereal boxes
waste corrugated cardboard, for example old packaging boxes
toilet roll tubes
2-litre plastic ice cream tubs
metal washers
wood glue ("cold glue")
short pieces of thin wire (1-2 mm thick)
paper clips
paper fasteners
long thin wooden dowels or "sosatie" sticks. You should cut these into shorter pieces, unless learners have saws and sawing blocks, and have learnt to do this safely.
nails

Tools required for this mini-PAT:

drawing equipment: pencil, eraser, ruler, geometry kit with set squares
scissors
plastic cups or plates (to keep wet cloths/sponges in) – can be waste
small pliers or wire cutters
craft knives and cutting boards/mats to cut on (optional)
craft saws (optional)

Safety:

Only allow learners to use craft knives and/or craft saws if you have already trained learners how to use them safely.

Have a basic First Aid kit in the classroom (disinfectant, plasters and bandages) and bleach to clean any blood spills.

Take care when learners work with sharp tools (scissors, nails or craft knives).

Week 1

Learners read about the scenario or problem that must be solved on page 219. They are then introduced to the parts of a mine shaft, and a drawing (Figure 3) showing the parts of a mine shaft and its lifting system.

Investigate: Mine shaft headgear and head frame (30 minutes)

This is an individual investigating activity for assessment. Learners study Figure 3 and use the preceding information to answer the questions about the names and purposes of different parts of a mine's headgear. Then they make a 2D sketch on unlined paper.

Investigate: Mine winches (30 minutes)

This is an individual investigating activity for assessment. Learners study Figure 4 of two different designs of a mine lifting system, and answer questions about it.

Questions 6 and 7 require critical thinking. If time allows, you should allow time for discussion of these questions in small groups after learners have handed in their work. This may help learners who were at first not able to understand the importance of the difference between the two designs.

Design: Design brief, specifications and constraints for a mine shaft headgear (60 minutes)

This is an individual activity for assessment. Learners apply the knowledge they recently gained, and maybe also do some research, in order to write the design brief. They then answer questions that guide them to write the specifications and constraints. These questions are about impact on people, purpose, safety, environmental impact, appearance, and costs.

Week 2

Your company prepares a tender

Learners work in teams of three or four. They form a company and start planning to submit a **tender** to the mining company. Make sure learners understand what a tender is (an offer to do specified work, for a specified cost, and within a specified amount of time).

Form a company (20 minutes)

Each team or company makes a list of the names of the company's members together with their ID numbers.

As a team, they use the information provided to formulate their mission statement. Their mission statement will include the best ideas from what they wrote down individually for the design brief.

Remind learners that their mission statement should answer all the following questions: "what your company will do, how you will do it, who you will do it for, and why you think you will be able to do it well".

Evaluate: Choose and combine the best ideas (40 minutes)

Combine your specifications and constraints

This is an activity for assessment. The members of each team compare their individual lists of *specifications* and *constraints*. They then make a list that is better than the previous ones, of *specifications* and *constraints* for the team's tender.

Combine your head frame and sheave wheel ideas

This is a *make* activity for assessment. Learners discuss their design drawings from last week and discuss what their team's head frame will look like.

Remind learners that the team's design must include only one sheave wheel and not two sheave wheels. That is because there will not be enough time in this mini-PAT to make a lifting system with two sheave wheels and a counterweight.

Thereafter, learners work *individually*. They each sketch their company's final design on unlined paper.

Make: Draw your head frame (60 minutes)

This is an individual *make* activity for assessment. Learners make 2D working drawings and 3D isometric drawings of their team's design.

Remind them that they must also draw the triangulation that they will use to strengthen their structure.

For their isometric drawings, you should point out:

- Chapter 13 Section 13.3 gives instructions for how to draw circles in isometric view.
- The example of an isometric drawing on page 228 shows how boxes (in red) identify the different parts of the headgear. First drawing boxes like these (in feint lines) will help the learners to draw their headgear in isometric view.

Week 3

Design: Make a list of materials and work out a budget (30 minutes)

This is an individual *make* activity for assessment. Work through the 'hints' with the class. Learners list all the different materials and different kinds of labour needed. Then they estimate how much of each material and type of labour they need. And then they calculate the cost for

each item, and add up all the costs.

Some learners may want to add the costs of renting the necessary construction equipment, such as a cement mixing truck, a crane, and an excavator. They might also want to add costs for the transport of materials, and temporary housing and offices for workers. Those are indeed important costs in a project like this. But learners would need advice from people in the construction industry to estimate those costs, and learners have limited time. So you should congratulate learners who think about such other costs, but not require them to include it in their budget for this mini-PAT.

Make a model head frame (30 + 60 = 90 minutes)

This is a *make* activity for assessment. Learners divide tasks between the different members of their team. Then they each work individually on their own tasks.

Prepare learners by explaining what they must *make*, and what you will be looking at, for assessment:

- team work,
- measuring skills,
- cutting and joining,
- use of tools,
- finishing and decorating their model, and
- safe working practices.

They must *make* steel columns, cross braces, flat frames, and a sheave wheel.

They must *join* side frames.

They must *mount* the sheave wheel on an axle and fit it onto the frame.

Make sure that they look at the illustrations and read the text with insight before they start making the model.

Make suggestions to help learners who are struggling, and

keep them on task so that they can complete the model within the time constraints.

Week 4

Communicate a headgear tender

This week, learners will *make* a winch and a cage, and add these to their headgear model.

They will also prepare a tender presentation to communicate to the tender board.

Lastly, they will evaluate the presentations of other teams.

Complete your model: Make a winch and a cage (20 minutes)

This is a *make* activity for assessment.

Refer learners to Figure 12, which shows a winch. Also, refer them to the detailed explanation of how to *make* a winch. Make sure they read the "Important things to remember" and the instructions on what is expected *before* they start building the winch and cage.

Evaluate the head gear (10 minutes)

This is an *evaluating* activity. Read the questions to the class before the learners start answering the questions.

Present your solution to Platinum Stars (90 minutes)

Prepare your tender

This is a team activity.

Remind learners of the importance of:

- keeping within the time constraints,
- the division of work: every member of the team must take part in the presentation, and
- what must be included in the presentation: sketches and drawings of their head frame and winch design, the budget, and a motivation for why the tender board should choose their solution.

Present your tender

This *communicating* activity will be assessed.

Evaluate different tenders

This *individual evaluating* activity is for assessment. Each learner listens to the presentations of other teams, and writes down the best points of each tender. They then decide which tender should win and explain their decision. Impress on the learners to be objective and fair when they judge the work of the other teams.



Figure 1: This is the tower above an old mine shaft. A cable winds around "sheave" wheels on the "headgear" at the top. These cables are attached to a lift that transports miners, machines and ore into and out of the mine.



Figure 2: This photograph shows detail of sheave wheels used for pulling in a cable. The sheave wheels in the photograph are used for a cable car, but they are similar to the sheave wheels used on a mine's winch system.

Week 1

An opportunity to tender for a mining contract

Platinum, a very valuable metal, has been found on land belonging to a tribe in a rural area. Samples show that the platinum is only 500 m below the surface.

An international and South African joint venture company, called Platinum Stars, has decided to invest money in this project. They want to sink a shaft to the 500 m point to take a few samples. Then they will decide on the best mining method.

*Your engineering company wants to submit a **tender** for the construction of the shaft headgear. The headgear must be able to transport miners and equipment 500 m underground. It must also be able to lift platinum ore that weighs 10 tons back up to the surface.*

A **tender** is an offer by someone to do work at a certain price. When a company "puts out a tender", it invites people to apply to do a job for them.

Headgears and mine winches

An overview of a mine shaft

Study Figure 3 on the following page. This picture shows a mine's lifting system. The whole lifting system is called the **headgear**. There are four main parts to a mine's headgear:

Part 1: The winch or hoist is in a winding house. This part of the system is used to wind or unwind the steel cable.

The hoist is attached to a motor and a control system.

The mine cage and the skips are lowered into the mine when a steel cable unwinds from the winch.

The mine cage and skips are raised when the steel cable winds up again.

Part 2: The sheave wheel is a pulley wheel that sits above the mine shaft. The hoist cable passes over the sheave wheel and then down the shaft of the mine.

The sheave wheel changes the direction in which the cable is pulling. It also reduces the sliding friction of the cable.

Part 3: The head frame is the structure that supports the sheave wheel. It must be strong enough to keep the sheave wheel in place when it lifts the heavy mine cage.

The left "legs" of the head frame slope towards the hoist. This is due to the tension in the cable pulling the whole frame in that direction. The sloping legs prevent the head frame from toppling or falling over.

Part 4: The cage and skips. The cage is used to transport miners and equipment up and down the mine. Attached alongside or underneath the cage are skips.

Skips are used to bring the ore and the waste rock out of the mine.

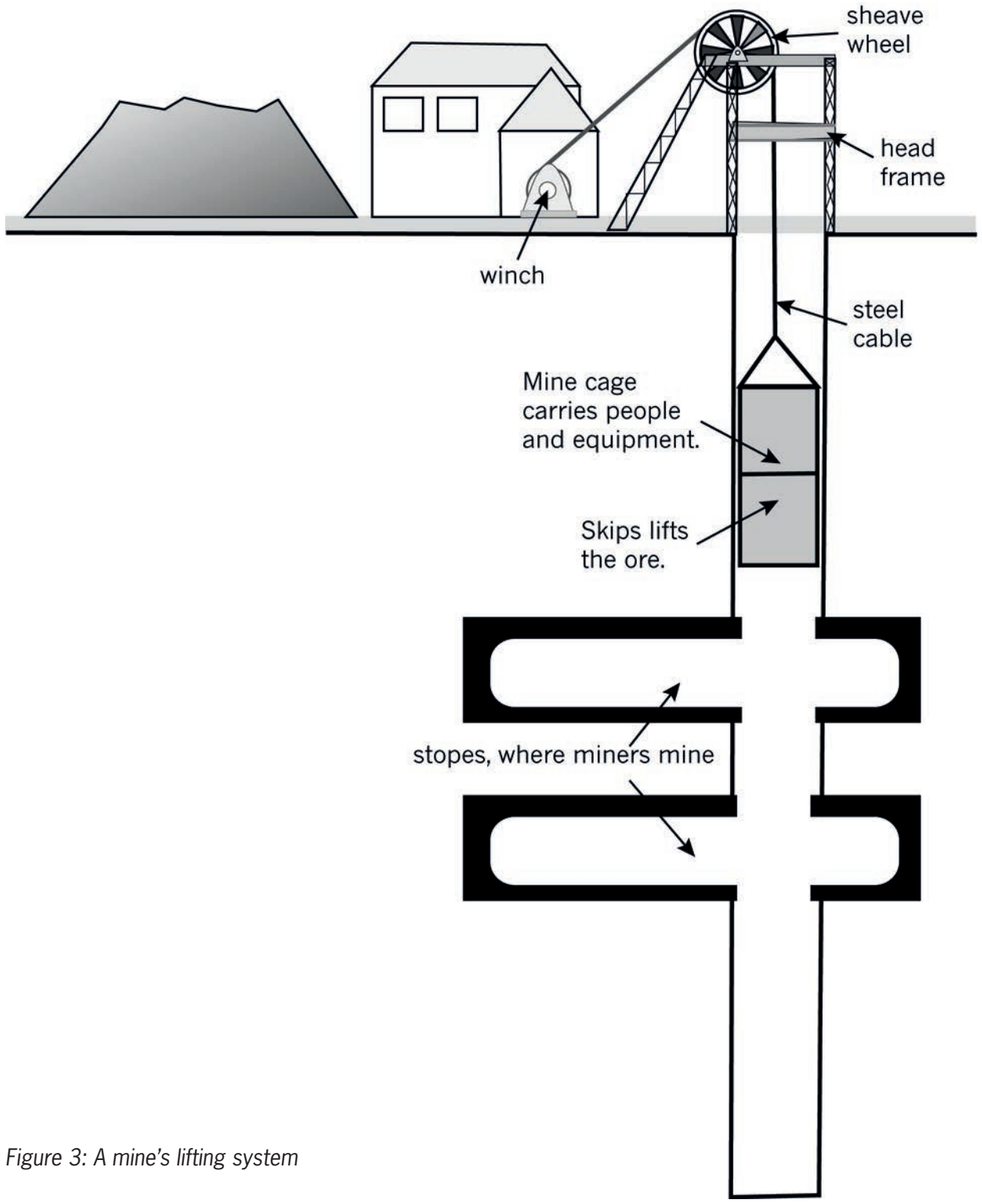

Figure 3: A mine's lifting system

Investigate: Mine shaft headgear and head frame (30 minutes)

Individual work

Use the picture in Figure 3 and your own information to answer the questions below:

1. What does the headgear of a mine do? [½]

   The headgear of a mine is the lifting system that takes miners up and down to the working areas underground, and brings ore to the surface.

2. What happens in the winding house of a mine? [½]

   The winding house contains the winch and cable that lifts the mine cage and skip.

3. Explain what a sheave wheel is and what it does. [½]

   The sheave wheel is a pulley. It is located above the mine shaft, and the cable from the winch passes over it and is attached to the cage.

4. What does a head frame do? [½]

   The head frame is a strong structure that supports the sheave wheel.

5. Why do the legs on a head frame always slope towards the winch? [½]

   It is braced to prevent the structure from falling towards the pull of the winch.

6. What do you call the two parts of the lift that goes down a mine? [½]

   The cage and the skip.

7. What do these two parts of the lift do? [½]

   The cage is for the miners and equipment; the skip is to bring the ore out of the mine.

Look at the photograph in Figures 1 and 2. The photographs show the head frame and sheave wheel on the tower above a mine shaft.

Study the structure of the head frame and then answer the questions below. You will have to use your knowledge of frame structures to answer the questions.

8. Do you think I-beams are a good thing to use for head frame supports? Why? [½]

   I-beams are stronger than single plates of steel because the I-structure reinforces the beam against bending.

9. Where do you see triangulation used on this structure? Explain how triangulation helps to make the head frame structure stronger. [½]

   There is triangulation throughout on the head frame. Triangulation strengthens the structure through cross-bracing the uprights. It works the same as triangulation on a roof truss.

10. What has been used to stop the head frame from being pulled over by the winch? [½]

    There are legs that slope from the winding house to the top of the head frame. These also act as triangulation, acting against the force of the cable pulling on the sheave wheel.

11. Look at the sheave wheel. Has it been placed in the middle of the upright column? Why do you think it is important to place the sheave wheel in exactly the right place on the head frame? [1]

    The sheave wheel is placed to the side of the centre of the vertical mine shaft, so that the cable from the sheave wheel down to the cage and skip is exactly in the middle of the mine shaft. This is necessary so that the cable does not pull the cage and skip against the side of the mine shaft, which would cause friction and make it difficult or impossible for the cage and skip to be lowered and raised.

12. Make a 2D sketch of a head frame and sheave wheel. [1]

[Total: 7]

Investigate: Mine winches (30 minutes)

Individual work

Look at the pictures in Figure 4. The pictures show two different types of mining hoists. The first one has one sheave wheel, while the second has two sheave wheels. Use these pictures to help you answer the questions below:

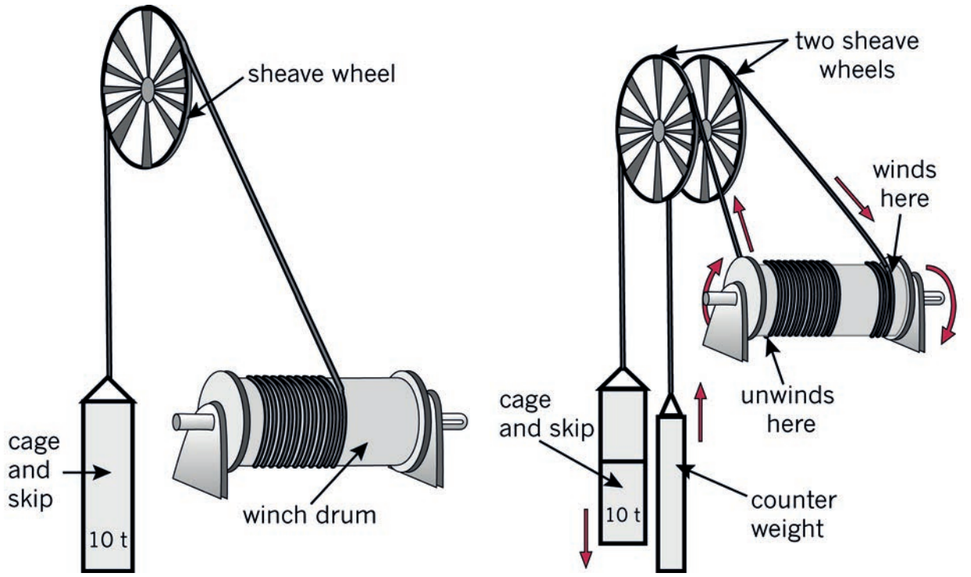

Figure 4: These are both mine winches with drum hoists. The winch on the right has two sheave wheels and a counterweight.

1. What are the differences between the two mine winches shown here? [½]

   The winch on the right has two sheave wheels working off the same drum. The one sheave wheel is for the cable that lowers the mine cage and skip. The other sheave wheel is for the cable that lifts the counterweight.

2. What do you think a counterweight does for a mine winding system?
   Hint: Imagine winding the winch by hand. [1]

   The rotational force that the counterweight causes on the winch, is in the opposite direction to the rotational force that the weight of the cage and skip causes on the winch. This reduces the overall rotational force on the winch (the two rotational forces "cancel" each other to some degree). So it now requires less rotational force of the winch motor to raise and lower the cage and skip.

3. If the mine winch drum diameter is 6 m, calculate how far the cage will drop for each single rotation of the drum. [½]

The learners must use the formula $C = 2\pi r$: 2 x 3,14 x 3 = 18,84 m.
The cage will fall 18,84 m.

4. If the mine winch drum diameter is 6 m, calculate how far the counterweight will lift for each single rotation of the drum. [½]

The learners must use the formula $C = 2\pi r$: 2 x 3,14 x 3 = 18,84 m.
The counterweight will lift 18,84 m.

5. Calculate how many turns of cable you will need on the drum for your cage and skip to move up and down by 500 m. [½]

500 / 18,84 = 26,54 turns of cable

6. Which of the two systems in Figure 4 do you think will need the largest motor? Explain your answer. [1]

The system on the left will need a stronger motor. The counter weight reduces the load on the motor on the right-hand example.

7. Which system will be safer? Explain your answer. [1]

The system on the right will be safer. If the motor fails on the left-hand system, the cage and skip would fall. With a counterweight, the two weights will be more-or-less balanced, and a cable brake could more easily stop or slow the fall.

[Total: 5]

LB page 223

Design: Design brief, specifications and constraints for a mine shaft headgear (60 minutes)

Individual work

Sketch a whole headgear solution that might impress Platinum Stars. You should mark your sketch with the approximate sizes for:

- the depth of the shaft,
- the carrying load of the skip and the mass of the counterweight,
- the approximate size of the winding drum,
- the approximate height of the headgear and the sheave wheel, and
- the approximate sizes of the mining cage and skip.

Note: You might have to do a bit of research on your own.
Write the design brief. Use the following questions to help you:

1. What is the opportunity you are tendering for? [½]

Platinum Stars has invited engineering companies to tender for a headgear system that will help them collect samples of platinum from a new mine shaft.

2. What do you need to do to tender for this project? [½]

The engineering company needs to prepare a tender that shows the design, specifications and cost of a headgear system that will meet Platinum Stars' needs and brief.

3. Write the design brief. Start your paragraph with: [1]

We are going to design and make …

We are going to design and make a headgear system for Platinum Stars. The headgear must be capable of lifting and lowering at least 10 tons of weight to an underground depth of at least 500 m. The headgear must be strong, safe and capable of working without breaking as long as the mine is in operation.

Write a list of specifications and constraints

4. **Think about people**: Write down at least two things that the mine winch system must do *for people*. How should it help the mineworkers? What should it do, or not do, for the local people who live near the mine? [1]

The mine headgear system must be safe and not put the lives of the miners at risk. It must be constructed using local labour, so that jobs are created in the community. It must not displace local communities. It must be built with minimal disruption of people's lives and minimal pollution.

5. **Think about purpose**: What is the headgear for? What must it do? How fast must the cage and skip travel? How far? How much weight does it need to carry? Write down at least two things about the purpose of this mine-winch system. [1]

The mine headgear system must be able to lift at least 10 tons of ore from the mine. The mine headgear system must be built with a cage for miners and a skip to lift the ore.
The mine headgear system must have a winch that works with a counterweight to ensure safety for miners and to lower the cost of the winch.
The mine headgear system must be able to lower the cages and skip to at least 500 m below the surface.
The winch system must be fast enough to efficiently lower miners and lift ore, \ but not too fast that it becomes unsafe.

6. **Think about safety:** What will happen if something goes wrong? What must your system have to try to prevent things from going wrong? What things must your system have to deal with emergencies when something does go wrong? Write down at least two things that will help to ensure that your design is safe. [1]

   The motor driving the winch must be tested to ensure that it is capable of repeatedly lifting the weight (10 tons) it is required to lift.
   The cable should have a braking mechanism to slow it down if the lift starts to move too fast. There must be an emergency escape from the lift cage and a ladder so that people can get out if the lift system breaks.
   The skip and cages must be counterbalanced with a ten-ton counterweight.
   The skip and cages must never be overloaded.

7. **Think about the environment:** Write down at least two things to help the environment when you design and make this headgear system. [1]

   The design and placing of the headgear and surrounding buildings must be done in consultation with the community. Systems must be put in place to ensure that no dust pollution occurs during mining.

8. **Think about appearance**: Do you think appearance matters when you design something such as headgear? Can your head frame's appearance help you to win the tender? Write down at least two things about the way you want your headgear to look. [1]

   The headgear must be built to ensure safety standards, but it can be covered with material (a brick structure for instance) to make it fit in with other buildings in the area. Once again, the community must be included in this process and must approve of the design.

9. **Think about costs:** What can you say about your costs for this project? Do you want the most expensive and the best of everything, or the cheapest and simplest, or something in-between? [1]

   When designing and building a headgear system, the most important concern is safety. Cheap material could be weaker. For some parts, like a reliable winch and a strong cable, the strongest and safest materials should be used, even if they are more expensive. The structure can be kept simple, as long as it is safe.

[Total: 8]

Next week

Next week, you will do Week 2 of your mini-PAT. You will form engineering companies, evaluate ideas and choose the best idea. You will draw your solutions and begin to prepare your company's tender.

LB page 224

Week 2

Your company prepares a tender

This is the second week of the mini-PAT for mechanical systems in Grade 8. During this week, you will form your own engineering company.

Then you will combine all of the ideas you came up with last week, and choose one idea for your tender.

You will present this tender to the mining joint venture company, Platinum Stars, later in this mini-PAT.

Platinum Stars will only accept tenders from companies. That means that you cannot submit a tender as an individual person.

A company is formed when two or more people come together for business reasons or goals.

Your business goal will be to do engineering work for Platinum Stars.

Form a company (20 minutes)

Team work

1. Choose your company partners by arranging yourselves into teams of 3 or 4 people. Write down the names of each company member. This list of names will need to appear on your tender document. Also write your ID number next to your name.
2. Write a mission statement: Write a few short sentences saying what your company will do, how you will do it, who you will do it for, and why you think you will be able to do it well. Start your sentence with the words:

   'We at Underground Mining Engineers aim to …

   We at Underground Mining Engineers will design and build mine headgear for the new shaft of Platinum Stars. The structure will be strong, and only the best materials will be used where safety is concerned. It will have minimal visual and environmental impact. We will involve the local community in decision-making, use mostly local labour, and source building materials locally where available. Our team of engineers will follow a design process to make sure that our client receives an appropriate, reliable and cost-effective product.,

LB page 225

Evaluate: Choose and combine the best ideas (40 minutes)

Combine your specifications and constraints

Team work

Look at the specifications and constraints that everyone in your team wrote down last week. They won't all be exactly the same. Make a new list that includes the best of everyone's specifications and constraints. Everyone in the team should write this list in their workbooks.

1. **Think about people**: [1]

   Ensure that the learners involve the local community in all aspects.

2. **Think about purpose:** [1]

   The purposes that the learners must consider include the construction process of the headgear, as well as the actual mining that will take place.

3. **Think about safety:** [1]

   The safety aspects that the learners must include are: safety when building the headgear; safety when mining (lowering and lifting miners); safety for the community by restricting pollution, etc.

4. **Think about the environment:** [1]

   The learners can refer to answer 3, and think about pollution that can occur during the construction of the headgear. Will earth be moved in order to build the headgear and its foundations? Will plants and animals be destroyed/killed? Can erosion of bare soil occur? Will there be any harmful dust (or cement dust) that can blow away? Will any chemicals be used that can pollute water? What steps can be taken to reduce possible environmental damage?

5. **Think about appearance:** [1]

   A metal structure can be ugly as it stands high above the surface. The learners must think of ways that the structure can be camouflaged. Remind them of cell phone towers that are camouflaged to look like trees or other structures. The learners can consider what buildings might already be in the area and put a brick or plaster structure in front of the headgear system, or they can simply consider painting the system to lessen the impact of the steel.

6. **Think about costs:** [1]

   Costs and safety must be considered together. There must be no compromise for the sake of reducing costs if that will result in safety risks. Ask the learners to think about transport costs as well. Is the mine far away from supply sources?

[Total: 6]

Combine your head frame and sheave wheel ideas

Individual work

Look at all the sketches that everyone in your team made last week of the head frame and sheave wheel. Use your specifications and constraints and discuss which combination of ideas will work best.

Note: You have already noticed the advantages of also using a second sheave wheel and a counterweight. However, you do not have enough time for this mini-PAT to design and make a model that also has a second sheave wheel and a counterweight. So you have to design and make a model with only one sheave wheel for this mini-PAT.

After you have completed this mini-PAT, you could make another improved model at home, which uses a second sheave wheel and a counterweight. You do not have to do that, and it will not be assessed. However, if it is an interesting challenge to you and you have time to do it, then do it!

1. Now make a sketch of your company's final design. [5]

LB page 226

Make: Draw your head frame (60 minutes)

Individual work

Look at Figure 5. It is an example of a working drawing for a small head frame design.

This view shows:

- the size of the sheave wheel,
- the height of the sheave wheel, and
- the distance between the front and back legs.

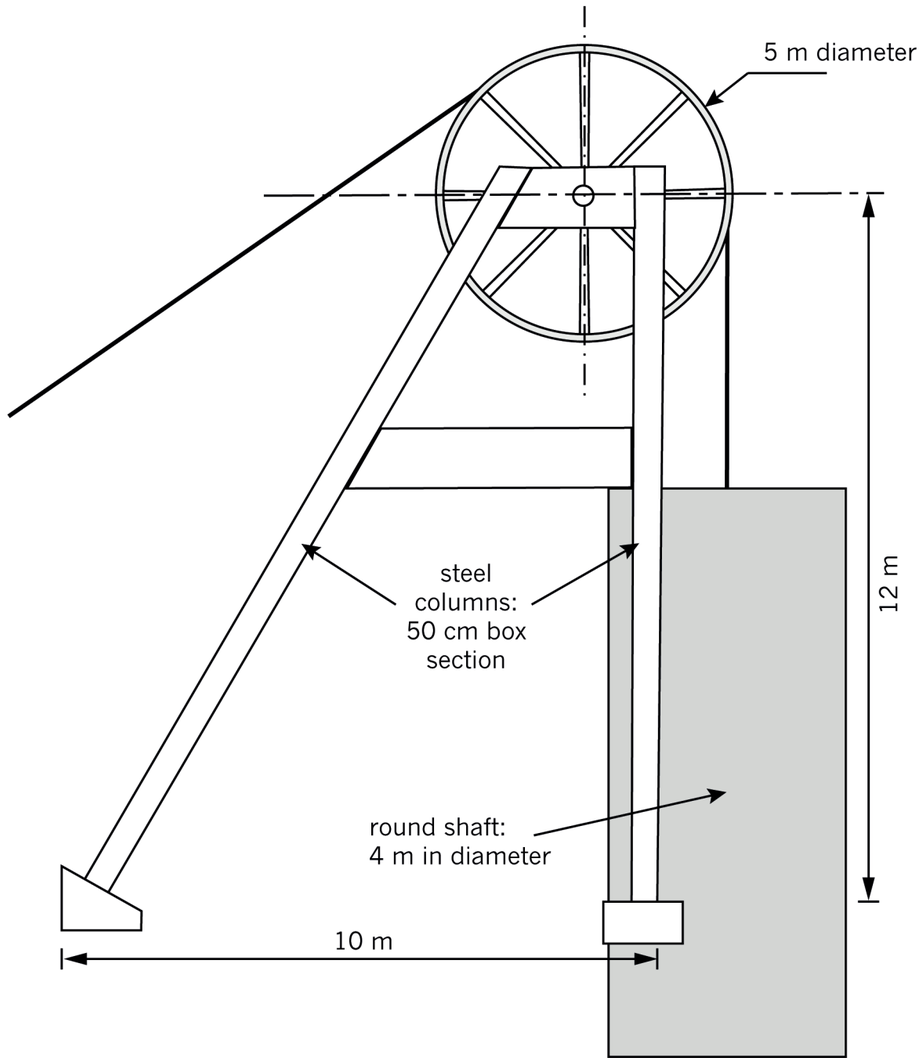

Figure 5: A working drawing of a head frame

LB page 228

Make a 2D drawing with dimensions

1. Draw your team's design of a head frame on squared grid paper. Use Figure 5 to help you.
   Show all the dimensions for the main parts of your head frame design.
   Note: You may need to add triangulation to make your structure stronger.
   You don't have to draw this to scale. [4]

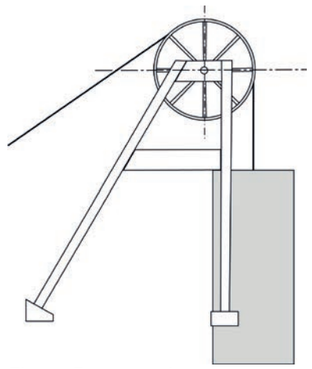

Figure 5 repeated

Make a 2D scale drawing

2. Now use rulers and set squares to draw a more accurate version of your company's head frame design. Use grid paper. Show dimensions. [5]

Scale:
Suggested scale for a small head frame: 1 cm = 1 m.
Suggested scale for a larger head frame: 1 cm = 2 m.

Make a 3D isometric drawing

The picture in Figure 6 shows a 3D isometric view of a head frame design. The drawing has been done on **isometric** grid paper, using instruments such as rulers and set squares.

This view shows all three dimensions of the structure. You can see the sizes and the detail of the height, width and length.

Isometric means equal measure.
One little triangle in this grid, represents 50 cm in each direction of the real structure.
That means that a line that crosses 10 triangles is 500 cm or 5 m long.

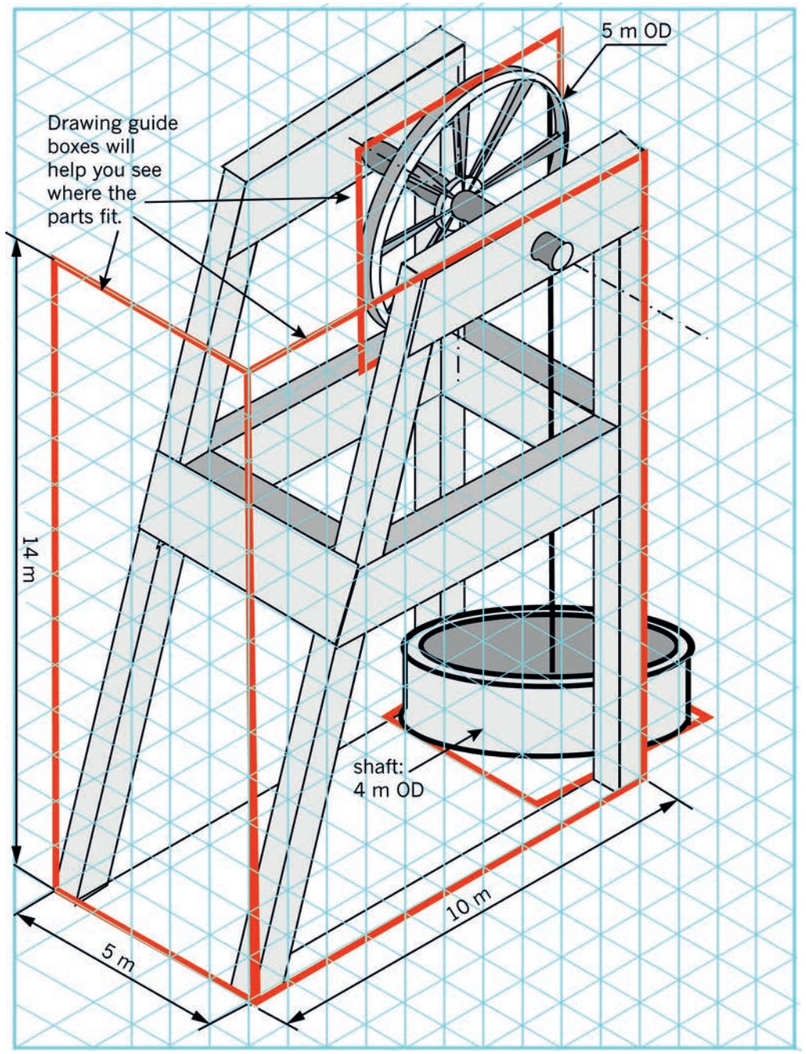

Figure 6: A 3D isometric view of a head frame design

3. Make a 3D drawing of your own head frame on isometric grid paper. [6]

[Total: 15]

Week 3

LB page 229

Make: Make a list of materials and work out the budget (30 minutes)

To win a tender, you will have to show that your design is going to be the best and the best value for money. The table on the next page will help you to work out a tender budget.

Individual work

Copy and complete the table on the next page.

Hints:

- Look at your head frame drawing. Calculate the total length of steel column you will need for the legs of the head frame. Then enter the total length into the Quantity Needed row of the table. Calculate the cost of the total length of steel columns that you need to buy and enter the amount into the table.
- Calculate the total length of steel you will need for the cross braces and enter this total into the table. Calculate the cost of the steel needed for bracing.
- Complete the rest of the table. Enter quantities you will need and calculate the cost estimate for each item.
- Your project advisor says that you will need one project manager, two engineers, four artisans, four semi-skilled workers and 12 unskilled workers on the project, and that it will take six months to complete. Calculate the labour cost estimate for each of these workers.
- Calculate the "subtotal" for each of the three cost categories, namely "steel for the head frame", "lift components" and "labour".
- What will your total project cost be? Add up all of the subtotals of the different cost categories to calculate the total project cost.

Mark allocation

- good estimates of materials quantities [1]
- correct calculation of labour quantities (person/hours) [1]
- calculations of cost estimate per item [2]
- calculation of subtotal and total project cost [1]

[Total: 5]

Item	cost per unit	quantity needed	cost estimate
Costs of steel for the head frame			
steel column	R500 per metre	200 m	R 100 000
steel for cross braces	R20 per metre	1 000 m	R 20 000
		Sub-total: Costs for steel frame	R 120 000
Costs of lift components			
sheave wheels	R 150 000	1	R 150 000
winch and motor	R 1 200 000	1	R 1 200 000
cable	R 100 per metre	2 000 m	R 200 000
cage and skip	R 350 000	1	R 350 000
		Sub-total: Costs of lift components	R 1 900 000
Labour costs			
project manager	R 30 000 per month	1 person × 6 months = 6 months	R 180 000
engineers	R 30 000 per month	2 persons × 6 months = 12 months	R 360 000
artisans	R 25 000 per month	4 persons × 6 months = 24 months	R 600 000
semi-skilled workers	R 20 000 per month	4 persons × 6 months = 24 months	R 480 000
unskilled workers	R 12 000 per month	12 persons × 6 months = 72 months	R 864 000
		Sub-total: Labour costs	R 2 484 000
		TOTAL PROJECT COST:	R 4 504 000

Make a model head frame (30 minutes + 60 minutes)

Team work

Now it is time to make a model of your head gear. You will need to make several different parts:

- the head frame with its sheave wheel,
- the mine winch, and
- the model lift.

In this activity, you will make the first part, the head frame.

Remember: Your teacher will watch you while you make your model to see how well you:

- work as a team,
- measure and mark things properly,
- cut and join parts accurately and with the correct tools,
- finish and decorate your model, and
- use safe working practices.

Not everything you try will work well. So don't be afraid to change your designs to improve them as you go along.

Safety tips:
Never play with cutting tools. Never point the sharp end at someone else. Keep your tools neat and clean and in good working order. Do not spill glue or leave the lid open as the fumes are poisonous.

Make the steel columns

You can make your steel columns using cardboard. Look at Figure 7 to help you. You can make round or rectangular columns depending on the **former** you use:

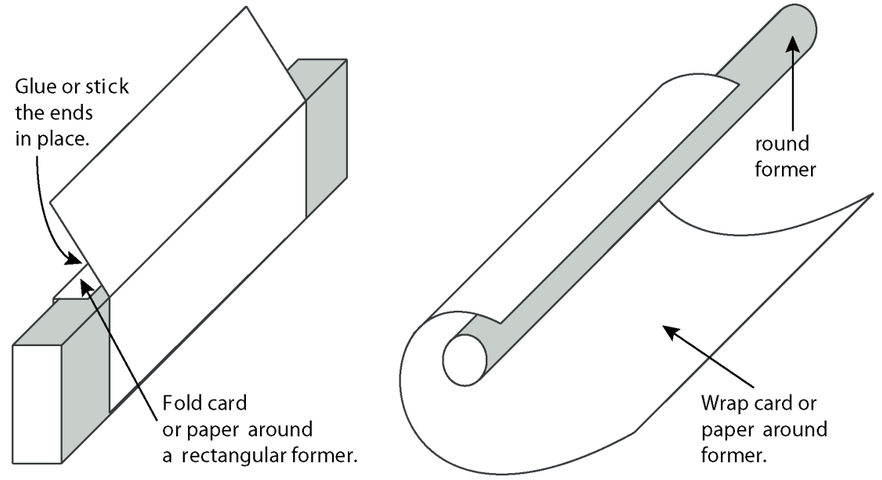

Figure 7: How to make the steel columns

- If you use a rectangular former, you will get a channel. A strip of wood 2 cm × 1 cm will work well for this.
- If you use a round former, you can make round columns out of cardboard. A dowel that is 1 cm thick works well for this.

A **former** is a shape that can be used to make tubes. For example, when you wrap a flat sheet over a rectangular former, you make a tube with a rectangular cross section.

1. Choose how you will make your columns and then make all the pieces you will need for your model. Have another look at Figure 7 to help you. [1]

Make the cross braces

You can make cross braces by joining flat pieces of corrugated cardboard together. You can use tape or glue to join the flat pieces. Look at Figure 8 to help you. Figure 8 shows three types of cross braces: angle irons, T-beams and I-beams.

2. Decide which of these cross braces you need for your head frame. Then make the cross braces you need. You will use these cross braces and the columns you made earlier to make a model of your head frame. [2]

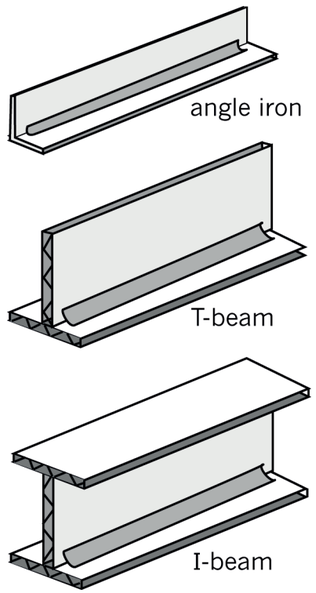

Figure 8: Cross braces

Make flat frames

LB page 233

Look at Figure 9. This figure shows one side of a frame.

- T-Beams have been used to join the vertical and the sloping column.
- Cross bracing has been added to strengthen the lower half of the frame.

3. Carefully cut your T-beams to the right size and shape to fit neatly between the columns. Then glue or tape them on. [2]
4. Cut your cross braces so that they can fit across the columns. Trim the ends so that the outsides of the cross braces can be joined to the sides of the columns. Remember that the cross braces has to fit neatly between the columns. [2]
5. When you are happy with your first side frame, make the second in exactly the same way. [1]

Join your side frames

6. Now make your head frame by joining your two side frames together. [2]

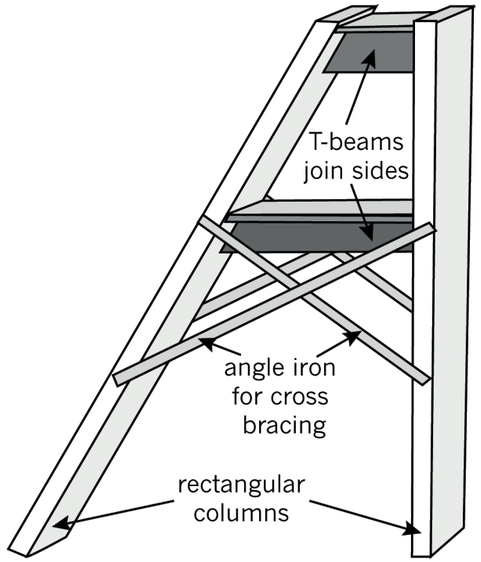

Figure 9: How to make one side of a frame

Make a sheave wheel

Look at the pictures shown in Figure 10. They show two ways to make a model sheave wheel:

- You can use a round cardboard box, such as the ones used to pack cheese triangles.
- You can cut three circles from corrugated cardboard and sandwich them together.

For both methods, a plastic straw has been used to make a bearing through the middle of the wheel. This bearing will make the wheel turn easily on its axle or shaft.

7. Make your own sheave wheel. Try to make it as close to the correct scale size as you can. Use Figure 10 to help you. [1]

LB page 234

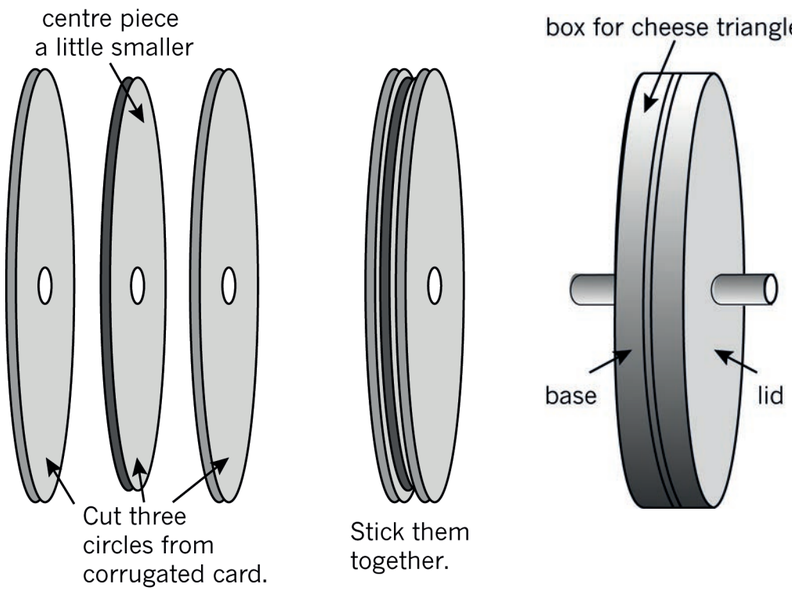

Figure 10: Two ways to make a model sheave wheel

LB page 235

Mount the sheave wheel on an axle and fit it to the frame

Your sheave wheel has to turn easily. It needs to have an axle passing through the centre of the wheel. You can use a dowel stick, about 4 mm in diameter, or a long nail (about 60 cm long) for your axle.

Look at the picture in Figure 11. A sheave wheel has been added to the top of a head frame in the following way:

- The axle is taped onto the top of the head frame.
- The wheel, with a straw through its centre, can rotate freely on the axle.
- Extra pieces of straw have been added to keep the wheel in the centre of the axle.

8. Now add your sheave wheel to its head frame. Use Figure 11 to help you. [2]

Will your axle bend? Have a look at the axle supporting your wheel. This axle will have to carry all the weight of the lift. Does it have enough support? If the distance between the axle and the supports are too long, then it will bend and might break.

If you need to, add extra supports for the axle at the top of the head frame.

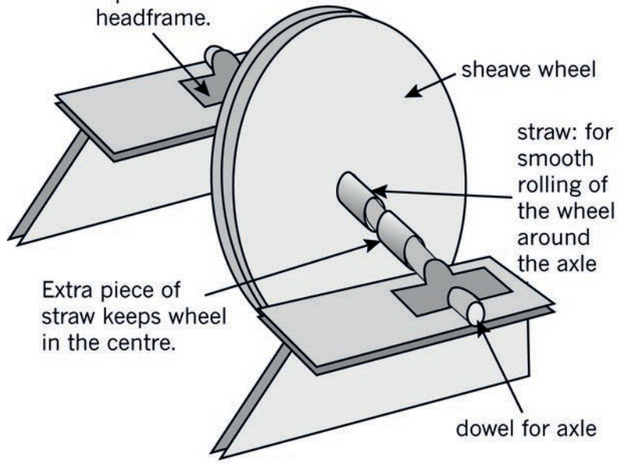

Figure 11: How to add a sheave wheel to the top of a head frame

[Total: 13]

Next week

Next week, you will complete your mini-PAT. You will make a winch and a lift and then you will present your tender.

LB page 236

Week 4

Communicate a headgear tender

This week is the last week of your mini practical assessment task for mechanical systems in Grade 8.

You will make your mine winch and add it to the head frame you completed last week. Then you will add a lift, commonly called a cage, to your model.

After testing your system and adjusting it, you will collect all the work you have done so far for this mini-PAT and use it to prepare a tender presentation to present to the Platinum Stars Mining Company.

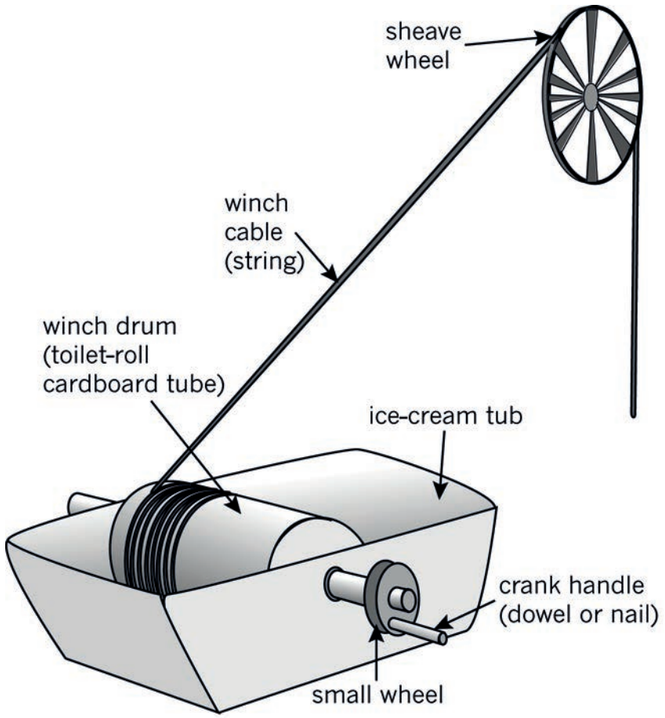

Figure 12: How to make a model mine winch

LB page 237

Complete your model: Make a winch and cage (20 minutes)

Do you remember investigating and making winches in Grade 7 Term 3 Chapter 15?

Look at Figure 12 again. It shows you how to make a model mine winch yourself.

- The winding drum for this mine winch was made from a toilet-roll cardboard tube.
- The winch drum has been mounted inside a 2 ℓ plastic ice-cream tub. This will be the winch house.
- This winch does not have a motor attached. Instead it uses a crank handle. But if you have a motor, then you can connect a belt drive or a gear system to the winch's drive wheel instead.

Here are a few important things to remember when making a mine winch such as this one.

- The drum has to turn when the crank handle is turned. That means that the shaft that connects the small wheel with the crank handle to the winding drum must be tightly attached to the drum, and to the small wheel. You can use glue or tape to make sure that the shaft is firmly stuck onto the drum and wheel.
- The shaft must be able to turn easily in the holes on the sides of the ice-cream container.
- The rope or string must be firmly attached to the winding drum and it must not be able to come off. Imagine what would happen to the lift cage if it did!

Shafts and axles:

The beam through the centre of a wheel is called a **shaft** when it turns with the wheel.

When the beam through the centre of a wheel remains still and the wheel rotates freely around it, it is called an **axle**.

1. Make a winch drum of your own. Remember it must be able to lift and lower a cage into the mine.

   Will your cage be cylindrical or rectangular? Will one of these shapes work better than the other? You can use a toilet paper tube for a cylindrical cage, or a rectangular box for a rectangular cage. Tie your lift cage to the rope on the shaft side of the sheave wheel. [2]

Test your head gear

With your cage and your winch attached to the head frame, you now have a complete system. Test your system to ensure that you can lift and lower miners, and lift mined ore from a shaft underground.

LB page 238

Evaluate the head gear (10 minutes)

Evaluate your solution

Look at the model your team has made.

1. Do you think the head gear is suitable for transporting miners to a depth of 500 m underground, and for lifting mined rock samples from underground? Explain your answer.

   The learners must be confident that their models are good enough. Check that the explanations match with the models they have built and question them on their conclusions.

2. What have you done to ensure that your system will be safe?

   It is important that they understand that safety is the most critical issue. Some teams may have added a cable brake for in case the winch fails. They may, for example, have used a washing peg to brake/pinch the string in an emergency.

3. What have you done to make your headgear look good so that the community will not complain about the mine ruining the area?

   Make sure that the learners' ideas are practical and could actually be implemented.

4. Do you think the environment will be damaged in any way by your structure?

   The learners must be objective on this point. There will be damage to the environment, but this must be kept to a minimum, and the benefits of the mine to the community must be considered as well.

5. Why should the tender board choose your head gear?

   Make sure that the learners refer back to their mission statement, as well as their design briefs and constraints. They can use these to form a sales statement that focuses on the benefits of their headgear.

6. Are there any things the tender board won't like?

   The learners must look at their designs critically and look again at the opportunity they were given at the start. They must consider all the aspects – including safety, community and environment – before they answer.

Present your solution to Platinum Stars (90 minutes)

Prepare your tender

1. Prepare a team presentation to the tender board of the Platinum Stars Mining Company. Each member of your team should talk about one of the points below:
   - Your head frame ideas. This person should show the sketches and drawings you did while designing your head frame.
   - Your winch idea. This person should show the sketches and drawings you did while designing your mine winch.
   - The budget. This person should talk about the costs of making your headgear.
   - Why the tender board should choose your solution. This person should use your 3D model to convince the tender board that your solution is the best.

Present your tender

2. Now present your tender bid to the tender board. [3]

   Learners should be assessed individually on their part of the presentation.

Evaluate different tenders

3. While listening to other teams' tender presentations, write down some of the best points about their tenders.

   Encourage the learners to be objective in this process, and to learn from the other teams' ideas. They should write down notes about what they thought were good ideas in the other teams' designs.

4. Which tender do you think should win? Explain your decision.

   Remember: To be good at evaluating you must show that you can judge other people's work objectively. [1]

   You should assess individual learners on how well they justify (give reasons for) their choice of a specific tender. You can then get the class to vote democratically on which tender should win. In the event of a tie, get the winning teams to stand down, and the balance of the class to vote again.

[Total: 4]

TERM 4

CHAPTER 17

Electrical systems and control

LB page 239

In this chapter, you will learn how to make light bulbs light up by building electric circuits. You'll learn about circuit components, input and output devices, and control devices such as switches. Finally, you will learn how to draw these components in circuit diagrams, using the correct symbols.

17.1 Explore simple circuits 302
17.2 Parallel connections: Two, three or more paths for current 307
17.3 Input, output and control devices in a circuit 311

17.1 Explore simple circuits

In this section, learners investigate ways to make a bulb light up, and *make predictions and hypotheses* about how circuits work.

They investigate the effect of connecting bulbs in series, and they should be able to qualitatively express the relationship between the number of bulbs in series and the magnitude of the current. From this relationship (i.e. as the number of bulbs increases, the current decreases), they can infer that each bulb has resistance.

This first activity may seem like you are allowing the learners to play with bulbs and cells but this is *play with a purpose*: learners need to try out their ideas and "get a feeling" for what the bulbs, wires and cells do. As they get ideas and test them, they are making predictions about what will work, and hypotheses about the rules for connecting a circuit. This predicting and hypothesizing is informal and learners probably won't put it into words, but it's the kind of thinking that learners need to do before they can understand formal explanations. So the "playing" is usually worth the time you spend on it.

Perhaps the learners have done some of these activities in Natural Sciences, but you can't count on that – sometimes very little practical work was done in Natural Sciences.

Encourage learners to look inside the bulbs and see how the filament wire is connected. Ask them how the current passes through the bulb and why the metal screw and solder knob must be connected to different terminals of the cell. Let the learners try other conductors such as keys, metal buckles on shoes, maths-instrument tins, and metal pencil sharpeners.

Essential background for the teacher: A more scientific explanation of current and voltage

Do *not* try to explain this to learners at this point, unless some learners come to you with clever questions that require a better explanation. The aim of the learner book activities in this chapter is for learners to *learn informally* from *hands-on experience*, without having to try to make sense of difficult scientific words and explanations.

The most important concept is the energy concept. The cell has chemicals in it that store energy. When you create a closed-loop path of conductors (a complete or unbroken circuit), the cell transfers some of the energy to the filament wire inside a bulb. The filament is made of very thin tungsten wire; this is a medium-bad conductor and it gets very hot as current passes through it.

The voltage marked on the cell (for example 1,5 volts) tells us how much energy the cell can give to each unit of electric charge, so a battery made of two 1,5 V cells can give twice as much energy to each unit of charge.

The *current* tells us how many charges per second passes a point in the circuit.

The *voltage* alone does not tell you how much current the cell will produce – the current also depends on how much the circuit resists the movement of charges.

How do we know how big the current is? For now, we use the brightness of one bulb, the "indicator bulb", to show how big the current is.

If you connect bulbs in series, you can see that they all become dimmer each time you connect another bulb. This is because the resistance in the whole circuit has increased, and so the current has decreased everywhere, all around the circuit. It is *also* because the voltage drop across each bulb becomes smaller as more bulbs are added in series. This is because the potential difference provided by the battery is shared between the resistors (bulbs) in series. (The voltmeter readings across the bulbs in series add up to the potential difference across the battery.)

The brightness of a bulb depends on the rate at which electrical energy is transferred to it. This depends on both the number of charges per second that passes through it (the current), and the amount of energy that each charge transfers to it (the voltage drop across the bulb).

This chapter focuses only on the effect of resistors in series or parallel on the magnitude of the *current*. The purpose is for learners to see experimentally how additional resistors in series or parallel change the overall *resistance* of the circuit.

An important misconception that many learners may have

Many learners may think incorrectly that the bulbs go dim "because they have to share the current". They will agree with your words that the current has decreased, but when they agree, they are seeing something different than you do – they think that the bulbs "use up" the current. They think that each bulb gets a bit less current because the bulbs have to "share the current".

The same number of charges per second (the current) passes through *all of the points in a series circuit*. But the total energy that each charge can transfer to resistors as it passes through the whole circuit (the potential energy provided to each charge by the battery) is shared between the resistors.

17.2 Parallel connections: Two, three or more paths for current

In this section, learners investigate the effect of connecting more than one path for current around a circuit. They should observe that the bulbs in parallel together allow a greater current than when they are connected in series. They should also be able to recognize a short-circuit connection, and identify it as a zero-resistance parallel path.

Here you can see the value of having an indicator bulb – as you add more bulbs in parallel, the indicator bulb glows brighter, and shows that the total current from the battery increases. Therefore, you decrease the overall resistance in the circuit as you add more resistors in parallel!

In some old books, you might find the term "current divider" where the book is dealing with resistors in parallel. We should avoid that term because dividing something usually means you get smaller parts of it, but in a parallel circuit the current increases with every extra bulb/resistor that you connect in parallel. (It would make more sense to talk about parallel connections multiplying the current from the battery.) Rather say that the total current from the battery splits, with each path getting some of the current. The path with the lowest resistance will carry the biggest current and the path with the highest resistance will carry the smallest current, of course. This situation can happen if the bulbs are not the same type and have differing resistance.

The other way to have differing currents on each path is when there is a short circuit. You see a short circuit in Figure 8. There are two paths, but one path (the orange-covered wire) has very low resistance, and so:

- most of the current flows on that path, and
- the total current from the battery is very big, because the resistance is so low.

17.3 Input, output and control devices in a circuit

In this section, learners should be able to distinguish between input devices, control devices and output devices. They also make a switch as an example of a control device. The learners should also match the circuit symbols for these devices to the real components.

As in the previous two sections, energy is the important concept. The input to a circuit is energy and the output from a circuit is energy. Within the circuit, energy is transferred from one part to another part.

An electric circuit is an example of a system. A system is a set of parts that work together so that a change to one part of the system causes changes in other parts of the system. For example, changes in the chemicals in the cell cause changes in the bulb filament, which make it white-hot. This idea of energy transfer in systems is a big idea in science and technology: energy is passed on from one part to another part. Some of the energy does useful work and some of it just heats up in the surroundings and does nothing useful.

A language problem with the terms "open circuit" and "closed circuit", "open switch" and "closed switch"

In some South African languages, people say, "open the light" (vula ugesi) meaning "switch on the light". Therefore, some learners have repeated difficulty remembering that to open a circuit means to switch it off. If you don't speak Zulu or Xhosa, you might not realise that the terms "closed circuit" and "open circuit" are confusing to some of your learners. You could use "complete the circuit" and "break the circuit" for a while, until the learners can use the new words correctly.

LB pages 240–241

Homework and revision:

You could build some real circuits and ask the learners to draw the circuit diagram for each one.



Figure 1

17.1 Explore simple circuits

LB page 242

Make bulbs light up — LB p. 242

You need all the components (parts) shown in Figure 2 to do this activity.

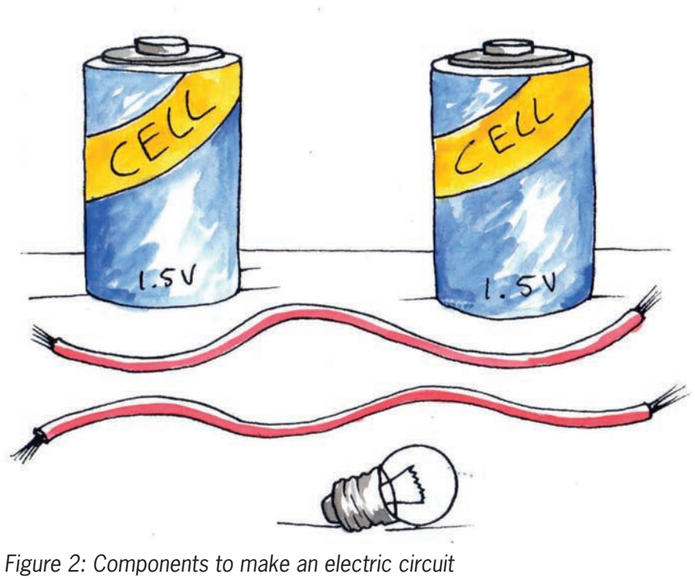

Figure 2: Components to make an electric circuit

Divide into teams of four to six learners. Two teams can work together if there is only one cell per team. Discuss the following in your teams, and do the experiments:

- Find out how to connect the parts to make the bulb light up. Find three or more ways to make the bulb light up.
- Touch the glowing bulb using your fingers. What does it feel like?
- Look inside the glass part of the bulb. Which part of the bulb gets hot?
- What happens when you connect two cells instead of one cell?
- How can you make the bulb flash on and off?

LB page 243

From this activity you found that a bulb will glow only if the wires touch it on the screw contact and the solder knob at the bottom.

You found that you must connect metal parts to make a path from the knob of a cell, through the bulb, and back to the flat end of a cell. This path is called a circuit. The current will not flow if there is a gap in the path of the conductors.

> An electric circuit is a complete path of conductors. The cells cause a current of electricity to flow around the circuit. The current will flow only if the circuit has no breaks in it.

The cells provide the energy to make the electricity flow through the circuit, and the electricity flowing through the "filament wire" inside the light bulb makes it glow.

Cells use a chemical reaction to make electricity flow through a circuit. In Chapter 9, you will learn more about the chemical reactions in a cell.

The voltage of a cell

The cells have a number, for instance "1,5 V", printed on them. Find that number on your cells. The number represents 1,5 volts. You say that the cell has a *voltage* of 1,5 volts.

When you connected two cells end-to-end you made a two-cell battery with a voltage of 3 volts. The 3 volt **battery** can give more energy to the bulb and so the bulb will glow much brighter.

When two or more cells are connected to provide electrical current to a circuit, you call it a **battery of cells**, or simply a **battery**. You can also call a single cell a battery.

Connecting bulbs in series LB p. 244

For this activity, you will need the following:

- a battery made from three cells in series in a **cell holder** (the cells must be fairly new),
- three bulbs in bulb holders,
- connecting wires,
- a **push switch**, and
- a small piece of paper with the words "indicator bulb" on it.

You can make a simple **cell holder** by rolling three cells in a sheet of A4 paper. Put sticky-tape on the rolled-up paper to keep it in place and around the ends of the battery. Push the wires under the tape, to touch the battery terminals.

You can make a **push switch** from a piece of stiff plastic and two metal paper-fasteners. A push switch only makes electrical contact while you keep it pressed in.

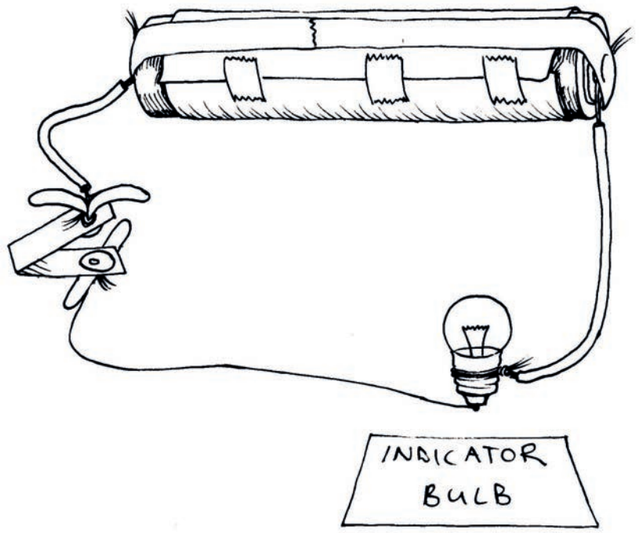

Figure 3

1. Set up the circuit shown in Figure 3. Press the switch to make the bulb glow, and notice how brightly it glows. This first bulb will be your *indicator bulb*.

If the indicator bulb is bright, the *current* is *big*.
If the indicator bulb is dim, the *current* is *small*.

2. Now connect another bulb in the circuit as shown in Figure 4.

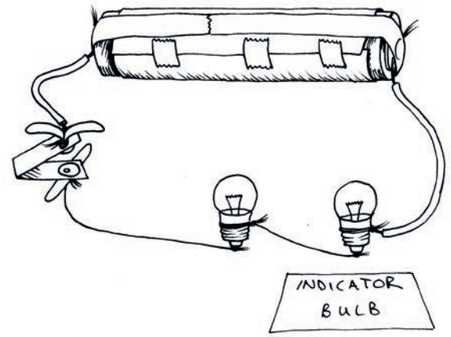

Figure 4

LB page 245

3. Cover the new bulb with your hand and look only at the indicator bulb. The indicator bulb is not as bright as before. What do you know about a current that has to run through the two bulbs?

   The same current flows through both bulbs. But the indicator bulb is glowing dimmer than in the circuit in Figure 3. So the current is now smaller than it was in the circuit in Figure 3.

4. Connect a third bulb to the circuit as shown in Figure 5.

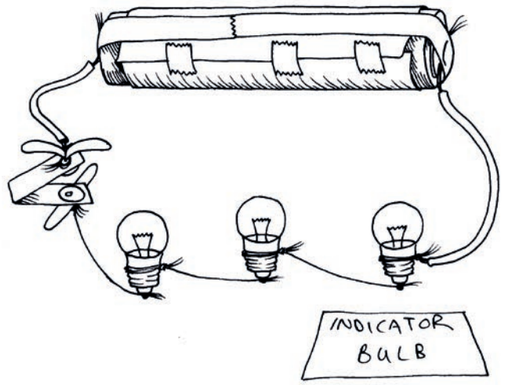

Figure 5

5. Cover both new bulbs with your hand and look only at the indicator bulb. How has the current changed?

   The indicator bulb (as well as the other bulbs) is glowing even dimmer than in the circuit in Figure 4. So the current is now even smaller than it was in the circuit in Figure 4.

Series connection LB p. 245

When we connect bulbs with only one path for the current, as in Figure 5, we say that the bulbs are connected "in series". The current must go through each bulb in the row.

1. What will happen if you add a fourth bulb?

   All the bulbs will glow more dimly than before.

2. If we add more bulbs to the circuit in series, the indicator bulb will glow more dimly. Copy and complete the following sentence: This tells us that if we add more resistance the *current* becomes smaller.

Resistance

The same battery can produce big and small currents. The current depends on the resistance.

As we add more bulbs in series, the battery finds it harder to push current around the circuit, and the current becomes smaller and smaller. The reason is that the filament wire in each bulb has resistance. The bulbs have resistance and therefore we say they are "resistors".

LB page 246

The bigger the resistance, the smaller the current.

- Good conductors have low resistance, bad conductors have high resistance. Examples of good conductors are copper, gold, silver and aluminium. They have low resistance.
- Examples of medium–bad conductors are tungsten, graphite – the black substance in your pencil – and **nichrome**. They do conduct electricity, but not very well. The filament-wire in a bulb is made of tungsten.
- Examples of very bad conductors are plastic, glass and wood. They have such high resistance that a battery cannot make any current flow through them. We say they are good "insulators". The plastic covering on electrical wire is the insulator for the wire.

Nichrome is an alloy (mix) of nickel and chromium. It is often used in electrical appliances in heating elements, since it has a high resistance.

17.2 Parallel connections: Two, three or more paths for current

Figure 4 shows two light bulbs connected in series to make them light up. Connect them again and try to remember how brightly the indicator light bulb glows.

Now connect another light bulb to that circuit, in the way shown in Figure 6 below.

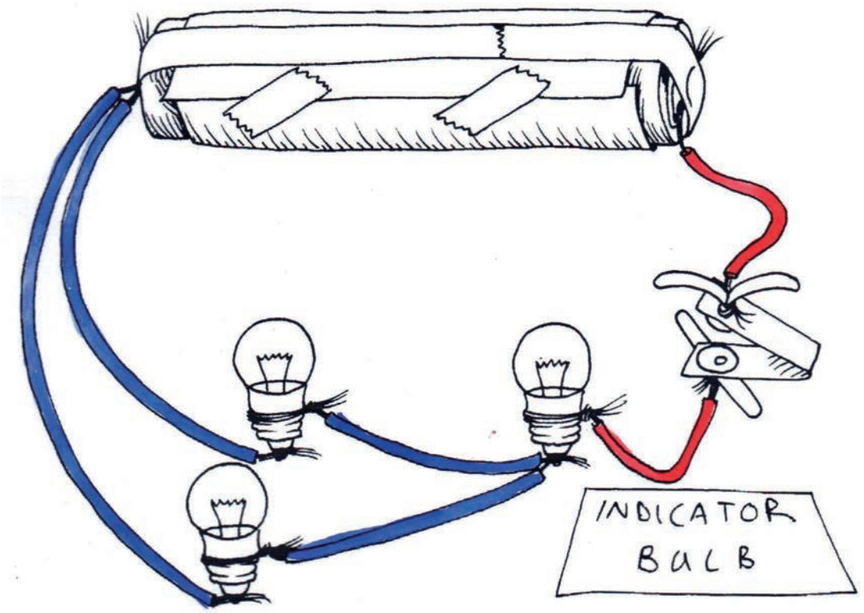

Figure 6

For a start, cover the two bulbs on the left with your hand, and look only at the indicator bulb on the right. It now glows more brightly than it did in the circuit in Figure 4.

All the current provided by the cell passes through the red wire. But that current is split between the two blue wires.

LB page 247

When resistors are connected in a circuit so the current is split between the resistors, you say that the resistors are connected in "parallel".

Connect three resistors in parallel LB p. 247

For this activity, you will need:

- a battery of 3 good cells,
- 4 bulbs in bulb holders,
- a push switch, and
- 8 connecting wires.

Look at the circuit in Figure 7.

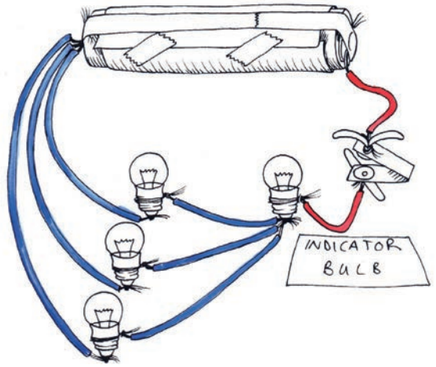

Figure 7

1. How many paths for a current can you see? With your finger, follow the paths for a current from the positive terminal of the battery through the bulbs, to the negative terminal of the battery.

   3 paths

2. Will the indicator bulb be as bright, brighter or dimmer than in Figure 6?

   brighter

3. Test your idea. Make the circuit in Figure 6 and then add a bulb as in Figure 7.
4. Was your idea correct?

When you connect bulbs so that the current has two or more paths to go through, you are connecting bulbs in parallel.

If you make more parallel paths for current, the battery can put out more current.

This is the same as saying that if you add more paths in parallel, then the resistance in the circuit becomes less.

Short circuits LB p. 248

Look at the circuit in Figure 8. Someone has made a mistake and connected the orange wire from the terminal to the switch.

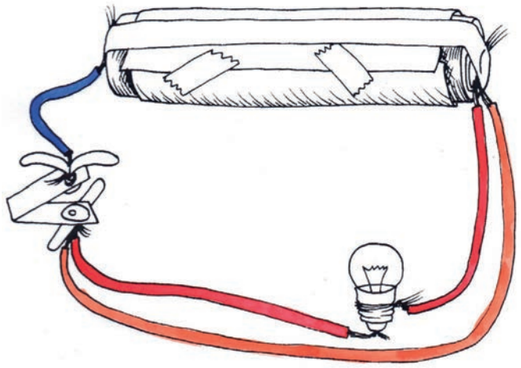

Figure 8

Find the orange wire. Does it have a bulb connected to it?

This wire is a zero-resistance path for current. If you press the switch, the battery will put out as much current as it possibly can. It will do that because it finds a zero-resistance path.

Almost all of the current supplied by the battery will go through the orange wire, and only a very small amount of current will go through the bulb.

The battery will put out its energy as fast as it possibly can. Therefore, it will get hot and it will be "dead" or "flat" in about 10 minutes.

The person's mistake was to make a parallel path for a current with the wire. We call that path a **short circuit**.

A **short circuit** is a parallel path for current that has almost zero resistance.

5. Why does the bulb not glow if you make a short circuit path?

   Almost all of the current goes through the short circuit, which has almost no resistance.

6. What happens to the wire forming the short circuit?

   It gets hot due to the very big current flowing through it.

7. Look at Figure 9. The bulb is glowing, but if you press the switch, the bulb stops glowing. Explain the problem, and draw a picture on the next page to show how you would connect the circuit in the correct way. The bulb should glow only when you press the switch.

When you close the switch, the red wire at the bottom forms a short circuit across the terminals of the cell.
The problem can be fixed by placing the switch in series with the bulb, instead of in parallel as it is at the moment.

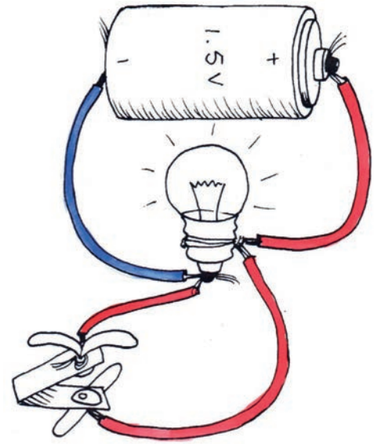

Figure 9

The switch should be in series with the bulb.

LB page 249

Why short circuits are dangerous

ESKOM supplies energy at 230 volts, which can make a heater red-hot. This is safe in a heater, since only the resistor in the heater gets hot, and not the wires from the plug. But if the insulation is broken on the wires, the wires may touch each other and create a short circuit. The current will not go through the heater, but take another path along the wires instead. The current will give off all of its energy to the wires. Then the wires can become red-hot and set fire to something.

All electrical appliances must only be used in the way the manufacturer recommends. Never attempt to fix a broken electrical appliance without expert help, and always make sure that appliances are switched off, or even unplugged when not in use.

17.3 Input, output and control devices in a circuit

An electrical circuit uses an input of electrical energy to provide an output of some type of energy. Examples are described below:

- A light bulb uses the *input* of electrical energy provided by a battery to give the *output* of light. You can say that a light bulb *converts* electrical energy into light energy.
- The resistance wire or element in a kettle gives an *output* of heat energy.
- The loudspeaker of a radio converts energy into an *output* of sound energy.
- An electric motor gives an *output* of movement or kinetic energy.

We can use a systems diagram to describe an electrical circuit:

energy input ⇨ control device ⇨ energy output

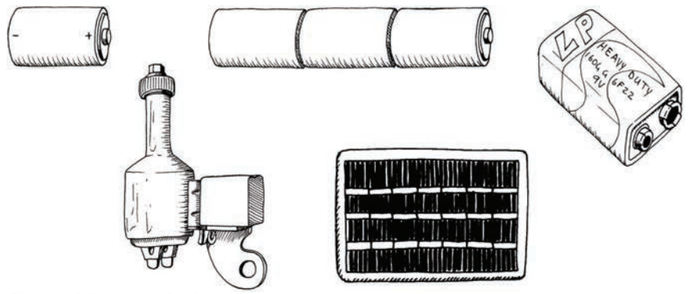

Figure 10: Input devices

LB page 250

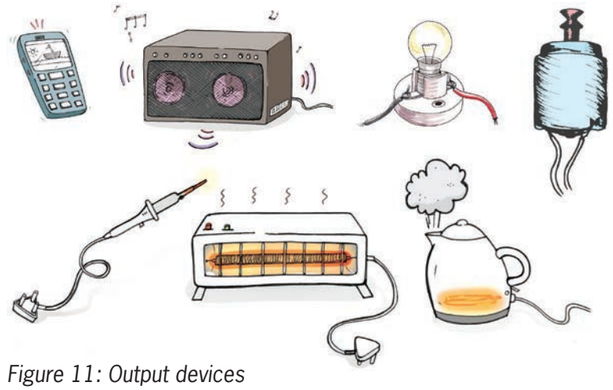

Figure 11: Output devices

Bulbs, heaters and other output devices have resistance. That means the electricity loses energy as it passes through the device, and it transfers the energy to the device. So a bulb is a resistor, and a heater element is also a resistor.

- Output devices have resistance.

Control devices

We want to switch circuits on and off, control how much energy output we get from a circuit, or control how much current flows in certain parts of the circuit. We can do this with the use of control devices. Examples of control devices are switches, dimmer-switches and resistors.

You have seen a light-switch on the wall of a room. That type of switch is called a "rocker switch". A "push switch" is used for doorbells. It completes the circuit only while you press it in. A "slide switch" is used for table lamps.

A "dimmer switch" lets you control the brightness of the lights in a room. A dimmer switch uses a resistor that allows you to control the current by twisting a knob. This is called a **variable** resistor.

To "vary" means to change, so this device is called a **variable** resistor.

Some resistors are not variable, and they have a fixed (unchanging) resistance. When you design a circuit, you can choose a resistor with the right amount of resistance to control the current in a part of the circuit.

In Grade 9, you will learn about more types of control devices.

LB page 251

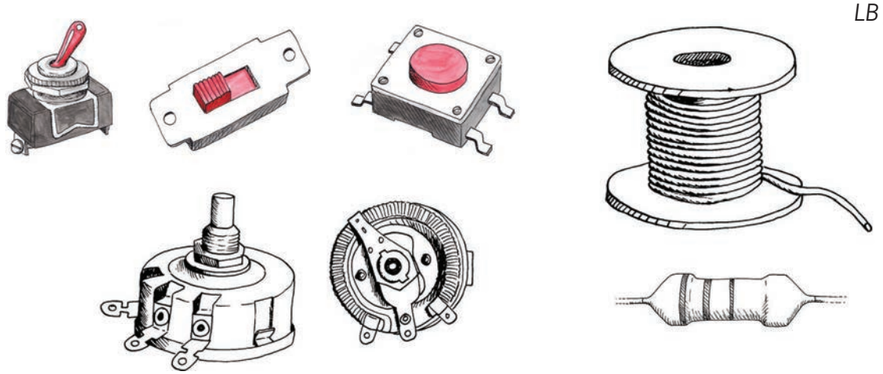

Figure 12: Control devices

Design and make a switch – different types of switches LB p. 251

A switch has a gap where the conductors do not make contact.

- When you press the switch, you complete the circuit and the current can flow through. You have **closed** the switch.
- When you move the switch to break the circuit, you have **opened** the switch.

To switch on a circuit, you **close** the switch. To switch off a circuit, you **open** the switch.

For this activity, you will need:

- a circuit with a battery,
- an output device such as a bulb, beeper or motor, and
- the materials and tools you need to make a switch.

1. Design and make your switch.
2. Test your switch.

Different switches can work in different ways, for example the switch can:

- close only while you press it,
- close and stay closed even after you remove your hand,
- close when somebody lifts up a heavy object,
- close when somebody opens a door, or
- close after a certain number of minutes.

3. Look at the ideas for switches in Figure 13. Explain how each one will work.

(a) Switch A:

This switch closes when you step on it or put a weight on it, and opens when you lift your foot or the weight.

(b) Switch B:

This switch closes when you move the paper clip to make contact with the other side of the switch. Once it is closed, it stays closed until you move it again to open it.

(c) Switch C:

This switch closes when you press on it, but opens again when you stop pressing on it.

(d) Switch D:

This switch closes when you put a coin in it, and opens again when you take the coin out.

(e) Switch E:

This switch closes when you remove the magnet, since the springy metal plate on the left returns to its normal horizontal position. When you place the magnet on top of the switch, the magnetic force bends the springy metal plate up so that the switch is open.

LB page 252

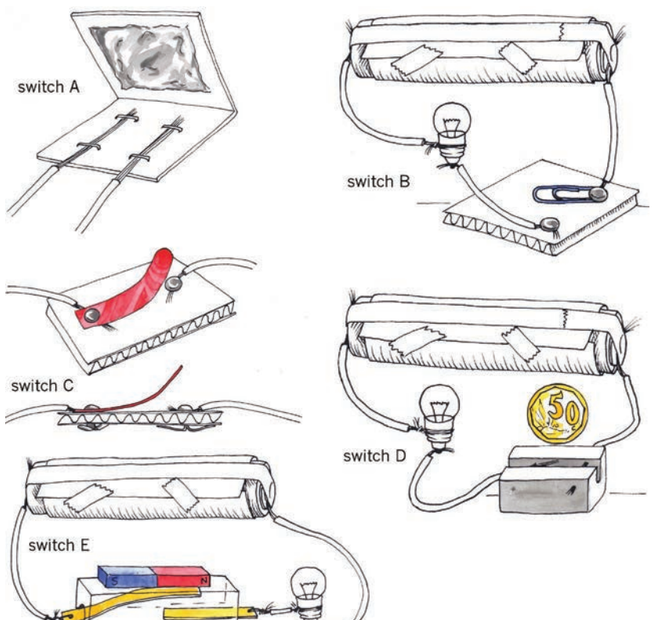

Figure 13: More ideas for making switches

The symbols used to draw circuit diagrams LB p. 252

After you have worked with real electric circuits, you can start drawing them with symbols instead of trying to draw what the circuit really looks like. Engineers, scientists and technicians mostly use symbols and diagrams.

A list of symbols for different electrical components is given on the following two pages. In Grade 9, you will learn the symbols for even more components.

Picture of the part	Symbol for the part	Name of the part
Input devices		
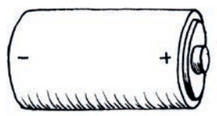		A single cell: These cells usually give 1,5 volts.
		A battery of three cells in series, usually giving 4,5 volts.
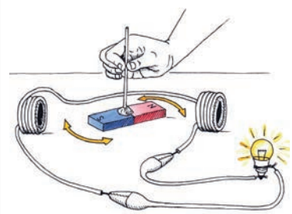	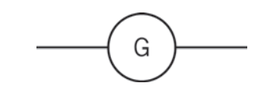	A generator converts rotational movement into electricity, by using a magnet and coils of copper wire.
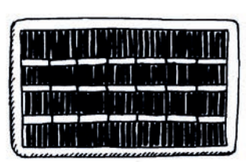	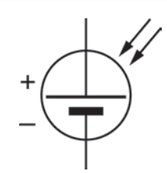	A photo-voltaic cell: This input device changes light energy into electricity.
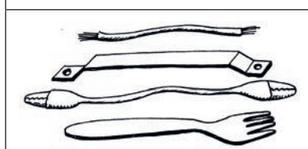		Any good conductor: Usually it is a wire or copper strip, but a fork or a coin could also be a conductor.
Control devices		
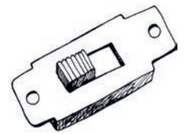	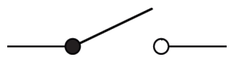	a switch
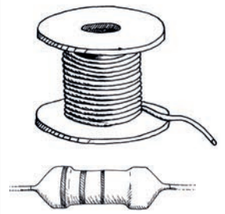	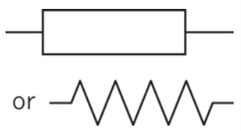	A resistor: This can be made from nichrome wire that is a weak conductor, or from graphite as in a "carbon resistor".
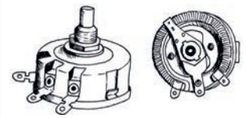	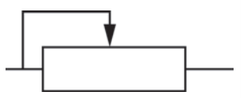	A variable resistor: Dimmer switches are variable resistors. The picture of the bottom of a variable resistor shows the coiled resistance wire inside it.

Output devices		
	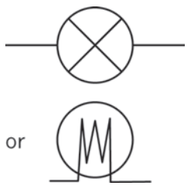	A bulb, also called a lamp: Bulbs are also resistors.
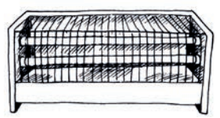		A heater: The resistance wire in a heater gets hot when electrical current flows throw it.
		A buzzer or a beeper produces sound as an output.
	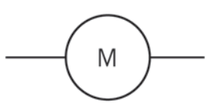	An electric motor: It converts electrical energy into rotational movement. It is similar to a generator, but works in reverse.

Homework: Revision LB p. 254

1. Draw the circuit diagram for Figure 4.

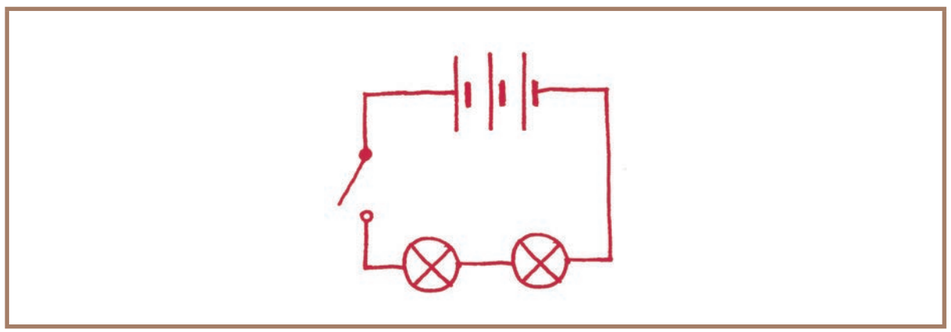

2. Draw the circuit diagram for Figure 6, but show a beeper connected in parallel with a bulb instead of two bulbs in parallel.

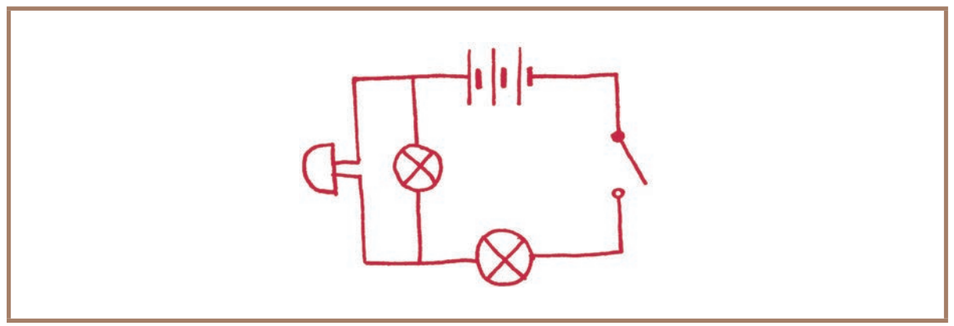

Next week

Next week, you will learn about different energy sources that people use to provide them with heat and light.

Chapter 18
Energy supply for the people

LB page 255

In Chapter 17, you learnt about electrical circuits and electrical components. You also learnt about symbols that are used internationally to draw diagrams for these circuits.

In this chapter, you will learn more about the practical aspects of electricity and how it affects people, particularly in informal settlements and rural areas. You will learn what different sources of energy are used for heating, lighting and cooking, and how illegal electricity connections cause problems for the country.

Lastly, you will discuss how our country needs to provide access to electricity for households, industries and buildings such as schools and hospitals. You will write a report on this topic.

18.1 Energy usage in rural and informal settlements 322
18.2 Unsafe and illegal electricity connections 329
18.3 Sharing electricity fairly 332



Figure 1: Pylons that carry the country's main electricity supply

This chapter provides learners with:

- a short account of the history of electricity provision to the public in South Africa,
- an outline of the historic evolution of energy usage and provision among rural and urban communities in South Africa,
- a description of the present problem of electricity theft, and
- an opportunity to consider issues related to the equitable provision of electricity and related social and economic priorities.

Learners are expected to:

- read and understand the sections that outline the nature and evolution of energy usage in South African communities,
- understand, discuss and debate issues related to the fair distribution of energy within the broader social and economic framework of South African society, and
- write a short, well-reasoned defence of their position on the matter of the fair distribution of electricity.

18.1 Energy usage in rural and informal settlements

and

18.2 Unsafe and illegal electricity connections

Sections 18.1 and 18.2 focus on how rural and urban households in South Africa have always depended on energy resources (of many kinds) to provide the energy needed to cook food, provide warmth and provide for other needs. They also show how (as technology has advanced and government policy has changed) electrical energy has replaced many of the earlier energy sources that households depended on.

This background information is needed for the tasks that follow in Section 18.3.

You should manage these sections as follows:

- Both sections 18.1 and 18.2 should be completed in the first 30-minute lesson. This is to leave 90 minutes for section 18.3, which will involve critical thinking and debate. The activities in Section 18.3 will need much time to be done properly.
- Ask learners to complete the reading of Sections 18.1 and 18.2 before the first lesson. They should come to class with notes that outline the main themes covered in these sections.
- Spend no more than 5 minutes of the first lesson providing an introduction. Then use the

remainder of the lesson to develop the main content themes by carefully questioning the learners. The aim should be to ensure that each learner concentrates on contributing to a general understanding of the content covered.

- Learners should submit their notes, as well as their answers to questions, to you at the end of the lesson. You should read and give feedback on the quality of their notes and answers. You should hand learners' notes and answers, including the feedback, back to learners the day before starting section 18.3 in class. This is to give learners opportunity to reflect on their work and the feedback before they start with the Section 18.3 lesson.
- As part of the feedback, give learners marks based on how comprehensively they have analysed the material and identified the themes. Set a high standard for this work. Learners should always submit written work that makes sense to another reader. It is not acceptable for learners to say that the notes were made for their own use and so justify incomplete, illegible or poorly structured work. The same standard will apply to the way learners participate in the class discussion in section 18.3. The aim is that there will be fruitful argument, so learners need to give reasons for their statements, and do so in a way that other learners can understand.

18.3 Sharing electricity fairly

This section requires that learners see electricity provision from the viewpoint of a number of different but interrelated sectors of society: households, state utilities (that provide transport, water, roads etc.), mines, factories, state services (schools, universities, hospitals etc.), and others.

It therefore demands that learners objectively consider the needs of different energy users, compare them, and develop credible arguments regarding the fair distribution of electricity.

Within a week of the conclusion of this chapter, each learner should produce a written report on the argument they presented during the class discussion. In addition to providing a written record of their arguments, the written report will also provide evidence of how well learners have listened to and understood the arguments of other learners.

An alternative way to structure the class discussion

If the class is very big, and/or if learners are not yet experienced with taking part in a debate, you could give more structure to the class discussion in the following way.

1. During the first 30 minutes:

- Identify 10 sectors of society that compete for electricity from the South African grid. For example, railways and airports, hospitals and emergency services, educational institutions, factories, shops, mines, government and municipal offices, and homes.
- Ask learners to indicate briefly one important reason why each sector may consider that they have more reason to "deserve" electricity than others do.

- Allocate one of these sectors to each learner in the class. Do not let learners choose their sectors themselves. This is to save time, as well as so that learners will get experience in arguing from the point of view of someone other than themselves. This will create teams of about three or four learners per sector.
- Learners then work in their teams to identify facts that support the argument about why their sector should be prioritised in the provision of electricity.

2. During the last 60 minutes:

- Give each team 5 minutes to present the facts that support their argument about why their sector should be seen as a priority for the allocation of electricity. During their 5-minute presentation, each member should present different facts and information to support their claim.

LB pages 256–257



Figure 2

18.1 Energy usage in rural and informal settlements

Before electricity: Clever ways of finding and using energy

In earlier times, before the introduction of electricity, communities made clever plans to get light and heat – aspects of life that modern humans, entirely dependent on various forms of electricity, simply take for granted. Let's see what communities in our country used for fuel and lighting before the advent of electricity.

African smiths discovered how to produce high temperatures in their village furnaces by burning wood. In these furnaces, they manufactured steel for weapons and implements. The furnaces date back over 2 000 years. Wood from the indigenous *acacia robusta* tree, which is particularly hard and therefore smoulders when it is lit, was used in these Iron-age furnaces. The same wood was also used for cooking fires and for lighting purposes.

Early "ovens" that were created by digging large holes and lining them with dung and other heat-retaining substances, were also used thousands of years ago.



Figure 3: A pit fire

Energy for heating, lighting and cooking in rural and informal settlements in the late twentieth century

Electricity was introduced in the country early in the twentieth century, but was mainly allocated to cities and industrial areas. As the century progressed, electricity reached more populated areas, but rural and informal settlements were still mostly not connected. As late as 1994, only 1% of rural households had access to electricity! Other methods had to be used.

Heating

Coal and charcoal were the fuels mainly used for heating in the absence of firewood. Wood was cheaper than coal, but it was harder to obtain because the areas around the settlements had been stripped by earlier inhabitants.

Another source of energy was gas, but this was also expensive, and needed special equipment such as gas bottles and factory-made gass burners to heat the houses and shacks.

Paraffin was another popular source of energy because it was easy to obtain and the heaters that burnt paraffin could be bought quite cheaply. But paraffin has safety concerns, which you will look at later in this chapter.

Lighting

Lighting is a necessity in daily life. Imagine trying to do your homework in the dark! By 1994, candles were still the main source of lighting in rural areas. Eighty-two per cent of rural households relied on candles to provide lighting after dark.

Lights using paraffin as a fuel source made up most of the balance – nearly 17% of the households. People who used gas for cooking could also use the gas for lighting, and a few households relied on their wood and coal fires to provide light. Gas, wood and coal were not very efficient.

A very small number of people could use electricity, almost less than 1% of the population of informal settlements.

Cooking

Paraffin was the fuel mostly used for cooking in informal settlements; over 90% of the people used paraffin cookers. Wood-burning and coal-burning stoves were used by almost all of the other households, with gas only occasionally being used for cooking.

Even though some areas were supplied with electricity, less than half of these people used it to cook. Stoves and electrical appliances were too expensive for most people living in informal settlements.

LB page 260

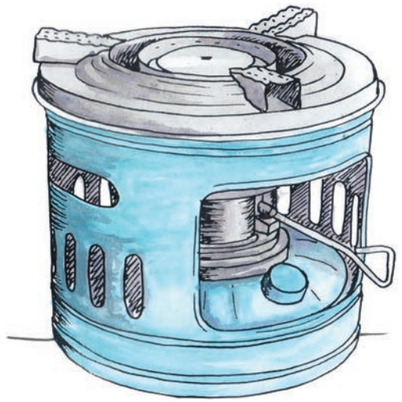

Figure 4: A paraffin stove

Fire risks due to open fires as a source of energy

Open flames are always dangerous. Informal settlement houses are normally built from materials that burn easily, and the shacks and houses are often built very close together. People without electricity who are forced to use fire for heating, lighting and cooking have to be extremely careful. Carelessness can cause major fires. When a major fire occurs, emergency services have difficulty putting it out since there are no access roads for their fire engines or water points for their hoses. But due to the lack of basic services, such as electricity, people opt for the use of alternative, often dangerous, energy sources out of necessity.

LB page 261

A **rural settlement** is far away from any towns, cities or big industries, such as mines. An **informal settlement** consists of temporary houses for people who moved closer to a town, city or industry, usually to find work.

Rural settlements are often far away from power stations, as well as from towns and cities where there are already electricity transmission lines. It is expensive to build electricity transmission lines to far-away places. It also takes times to plan and build them.
Some people in rural settlements cannot afford to pay for electricity.

Informal settlements are usually built very quickly and without planning, so there is no time to plan or build electricity transmission lines before the people move there.
Some people in informal settlements cannot afford to pay for electricity either.

Questions about energy supply — LB p. 261

1. Imagine you were put in charge of changing the way electricity is supplied to benefit the population of the country.
   (a) Looking at the percentages of the population that had an electricity supply, what would your main goal be?

   To give more people access to electricity.

   (b) Which section of the population do you think needs the most attention?

   rural and informal households

   (c) Write four or five things that you will investigate before you decide to supply a rural or informal settlement with electricity for the first time.

   For example: I would investigate the safety aspects of allocating electricity to informal settlements.

   More examples:
   I would investigate the cost of setting up power transmission lines to rural areas.
   I would investigate how much money people in rural and informal households, without electricity, are spending on other forms of energy such as coal, paraffin and candles. This information will give me an idea of how much people in those households can pay for electricity.

The present: Energy for all South Africans

The South African government announced its policy to provide free basic services to the poor in 2000, the main areas of focus being free basic water, sanitation and power supply.

Electricity is generally cheaper than traditional forms of energy such as coal, paraffin, candles and wood. Even if the direct cost of electricity is not cheaper than the direct cost of wood, the indirect savings or advantages need to be taken into account. For example, members of a rural family could spend hours gathering and chopping firewood, hours that could be spent doing something else if they had electricity.

For the government to achieve their aim, about 210 000 households a year are being connected to the **national grid** and another 10 000 a year are supplied with **renewable energy.**

Of the 12,8 million households that are electrified in South Africa, about 52 000, mostly in rural areas, are being supplied by basic solar power. This is when the sun's energy is gathered to charge batteries that are then used to power appliances.

The electricity network across South Africa is called the **national grid**. It includes power stations, power lines and substations.

Renewable energy is energy that comes from resources that will not run out. The sun and wind are the most common sources of renewable energy.

By 2013, 85% of the country had been given access to electricity. In 1994, only 37% of the country had electrical power, so it can be said that the government's policy is effective.

The government is also encouraging poorer people to get connected to the electricity system by offering an amount of free electricity. This is currently 50 kWh per household, per month.

Investigate: Energy resources LB p. 262



Figure 5: An informal community with an electrical supply. Notice the control boxes at the top of the poles. They control how much electricity each household uses and have a built-in safety mechanism for when there is a short circuit.

Andile lives here. He plans to be an engineer and wants to find out what the people in his community need. He already knows the following:

- The people in this community pay for energy when they use vehicles such as cars, buses and taxis. These vehicles use petrol or diesel as an energy resource.
- The people also pay for energy when they buy food to eat. Food is the energy resource human bodies need to function.

Now he wants to ask them about the energy they use for heating their homes in winter, for cooking food and boiling water, and for light at night.

He separates the *energy resources* from the *systems* they use. For example, paraffin is an energy resource that can be used in different systems: paraffin stoves, paraffin heaters, paraffin lamps, and even fridges that work with paraffin.

Help Andile get his questionnaire ready: Individual work

Copy and complete the table below and on the next page by writing what you expect people living in different households will tell you about the different energy resources they use and the different systems they use them in. The first table is for households that do not have electricity, and the second table is for households that do have electricity.

You will find pictures of systems that use energy resources in Chapter 17 and in this chapter.

Households without electricity		
I think that people will tell us about these ENERGY RESOURCES:	**I think we will hear about these SYSTEMS and USES of the energy resources:**	**DISADVANTAGES or RISKS of using these energy resources:**
paraffin	lamps, stove, heater, fridge	This can easily cause fires because it is a liquid fuel that can spill. It also releases smoke when it burns.
coal	stove	very thick smoke
wood	stove, fireplace, braai	smoke, environmental damage when too many trees are cut down
candle	often used for light	It can cause fires if it falls over and there is nobody watching it.

batteries	torch, cell phone, radio, television, car	It pollutes the environment when thrown away.
gas	gas heater, gas stove, gas lamp	It can cause fires if it is not installed safely.
sunlight	People only do certain types of work and activities during the day, while there is light.	none

LB page 264

Households with electricity		
I think that people will tell us about these ENERGY RESOURCES:	**I think we will hear about these SYSTEMS and USES of the energy resources:**	**DISADVANTAGES or RISKS of using these energy resources:**
paraffin	not used	
coal	not used	
wood	fireplace, braai	smoke, environmental damage when too many trees are cut down
candles	These are sometimes used for light when the electricity supply is cut off or to create an atmosphere.	It can cause fires if it falls over and there is nobody watching it.
electricity that is not supplied by batteries	lights, stove, fridge, radio, television, heater, food blender, electrical tools, computer, battery charger	Electrical energy can physically shock people, and it can cause fires if the wiring is not done properly.
batteries	torch, cell phone, car	It pollutes the environment when thrown away.
gas	sometimes used for stoves and heaters	It can cause fires if it is not installed correctly.

sunlight	People use sunlight during the day, but they can also do many things at night since they have electrical lights.	none

18.2 Unsafe and illegal electricity connections

ESKOM and other companies generate (make) electricity and supply it to users through long wires called power lines. The users include shops, factories, mines or people who live in flats, shacks or houses. The users connect to the big power lines through thinner cables that go through metering boxes. The metering boxes measure the amount of energy used.

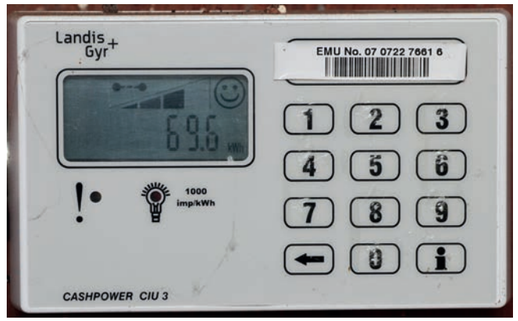

Figure 6: A meter that measures legal electricity usage

LB page 265



Figure 7: Illegal electricity connections in an informal settlement. Notice that there is no control box at the top of the pole for measuring electricity usage or for cutting off the electricity in case of a short circuit.

The electricity company needs money to buy coal, new generators, to pay the people that maintain the generators, and for building and maintaining power lines. This is why we have to pay for electricity.

Electricity is not a cheap energy resource, which is why some people make illegal connections. Look at Figure 7. You can see the wires people have connected to an electricity pylon. These are illegal connections; the word "illegal" means "against the law".

The law says that only a qualified electrician can connect a building to the main electricity supply from the municipality, which is called "the mains". The mains supply electricity with an energy level of about 220 volts. This much energy is enough to kill you. This means poorly connected wires can really hurt someone and cause a short circuit that could start a fire. You learnt about short circuits in Chapter 17.

Electricians have been trained to make proper and safe connections, and know how to connect the mains to the metering box. However, there are people who think they know how to work with electricity, and they connect wires to the mains on their own. Since this is illegal, they don't connect a metering box. They will often use bare wire, without any insulation, that hangs in trees or lies on the ground. They leave wires where they can easily come into contact with corrugated zinc-iron walls and roofs, or zinc-iron gates and fences, or metal window-frames. They forget or don't know that all these metal objects can become conductors that will carry 220 volts of electricity if they come into contact with the illegal live wires from the mains. These connections can easily cause short circuits that often cause fires in shacks and houses.

The price of stolen electricity LB p. 266



Figure 8: An electrical substation. These are often targeted by electricity thieves.

Illegal connections are dangerous, and cost the whole country money! How does electricity theft affect the following groups of people, and what actions can they take to help stop this crime?

This is a discussion task. Work in groups of three or four.

1. The community:
   (a) How are they affected by electricity theft?

   Learners' own suggestions.

   (b) What actions can they take to help prevent electricity theft?

   Learners' own suggestions.

2. Schools:
   (a) How are they affected by electricity theft?

   Learners' own suggestions.

   (b) What actions can they take to help prevent electricity theft?

   Learners' own suggestions.

3. The government:
   (a) How are they affected by electricity theft?

   Learners' own suggestions.

   (b) What actions can they take to help prevent electricity theft?

   Learners' own suggestions.

18.3 Sharing electricity fairly

In section 18.1, you learnt how South Africa's government is improving the electricity supply so that more people can have access to electricity in their homes.

Electricity has to be generated by ESKOM, and they not only have to supply individual households, but also tend to the whole country's electricity needs. As you know, some systems are targeted by thieves, such as street lights and traffic lights. These are municipal systems. Who else requires electricity?

Consumers of electricity LB p. 267

Copy and complete the table below. Work with a classmate on this exercise.

- Try to think of every situation where electricity is required by users in South Africa.
- Think about transport, manufacturing and private users.
- Think about "hidden situations" where electricity is used, such as pumping water to households.
- Does your school use electricity?

Examples are given below to guide you.

User	Item
Railways	Electrical trains
	Stations
Hospitals	Lighting
	Machines
Factories	
Mines	
Shops	

As a class, discuss the sharing of resources in the country. Use your lists to discuss the following points. Appoint someone to make notes on the blackboard. These are some of the topics you need to cover, but you must discuss the use of electricity in depth, so add other discussion points as they arise:

- Who do you think is the greatest user of electricity in the country?
- Which group of people need electricity the most? (For example, do you think factories are more important than households?)
- Do you think that the supply of electricity affects job creation in South Africa?
- Who would suffer the most if there was a power failure for a long period of time?
- Are informal settlements ready for electricity supply?
- What steps should be taken against people who steal electricity by using illegal connections?
- What safe alternative energy sources do you think can be used where national grid electricity is not available?

During and at the end of the discussion, make notes based on the points the class has raised. You can use these notes as references to help you in the next section.

Write a report on electricity usage in South Africa

Write a report on what you have learnt about electricity usage in the country. In this report, you should comment on the following topics:

- How does the availability of electricity influence the type of appliances people use in their households? Do people in households that don't have electricity have the same kind of appliances as people who do have electricity?
- How are rural and informal settlements disadvantaged by their lack of access to electricity?
- What is the impact of electricity theft and what can be done to prevent this crime?

Next week

In the next chapter you, will learn about batteries and photovoltaic cells.

Chapter 19
Electrochemical cells and batteries

LB page 269

19.1 Electrochemical cells and batteries 337
19.2 Rechargeable batteries 341
19.3 Photovoltaic cells 344



Figure 1: Different appliances that use electrochemical cells or batteries of cells. One of these appliances also uses a photovoltaic cell. Can you tell which one?

Materials and tools required for this chapter:

Each team of three to four learners should have the following:

- two 5-cent coins or pieces of copper of about the same size,
- a galvanised metal washer, which is a disc with a hole in the middle,
- a piece of cloth or cardboard about the same size or slightly smaller than the 5-cent coin,
- a piece of cooking foil, about the size of two fingers next to each other, and
- sticky tape.

The teacher needs two sets of the following:

- a voltmeter or multimeter,
- a bowl of salty water – 1 teaspoon of salt to 100 ml of water,
- a light bulb,
- a beeper that will work at 3 volts, and
- six crocodile-clip wires, three insulated with red plastic and three with black plastic.

19.1 Electrochemical cells and batteries

What is inside a cell?

In this section, learners interpret cutaway diagrams of two kinds of cells, and identify parts of each cell. Then teams of learners make a simple cell and show that it gives a voltage. The teams then connect their cells in series and make a battery that can produce a sound from a beeper or make a light bulb glow.

You can open a cell, to show learners what's inside. You should cut the cell from top to bottom, as the figures show. The cheaper type of cell (zinc and carbon) is fairly, easy to open. It usually has a cardboard or plastic cover, and when you take this off, you find a casing that is made of zinc. Zinc is not hard and you can cut it with a knife. Hold the cell down on a table and be careful that the knife does not slip. (Do not let learners do this!) Work on a large sheet of plastic or layers of newspaper because the chemicals inside are messy.

Make a cell and a battery

When the learners have made their single cell, connect your voltmeter with the red lead on the copper and the black lead on the aluminium foil (the zinc is laying on the aluminium foil, which is a conductor, so you are measuring the voltage between the copper and zinc).

It is fun to connect all the learners' single cells in series into a battery. With 6 cells as shown in the figure, you should be able to get a voltage of over 5 volts. However, the current is very small, because the surface area on which the chemical reactions happens, is small. Luckily, the beeper works on a very small current and the high-pitched sound is a good indication to the class that the battery is working.

You could also connect the single cells in parallel, meaning that all the zinc washers lie on the same sheet of aluminium foil, and all the copper coins are connected by another sheet of aluminium. Then, the voltage will only be about 1 volt, but you can draw a bigger current from this kind of battery.

Does the size of a cell make a difference?

A small AAA-size cell and a big D-size cell give the same (maximum) voltage of 1,5 V. So why would you ever need a bigger D-cell if a smaller AAA-cell will do the job? There are two reasons:

a) A bigger cell can produce a bigger maximum current than a smaller cell. This is because a

bigger cell has more surface area inside it on which chemical reactions can happen, so that electrical energy can be released quicker. Another way to say this, is that a bigger cell has a smaller internal resistance, so it is possible for a bigger current to flow (because the sum of the resistances in the circuit as well as inside the cell is smaller).

b) A bigger cell can supply a certain current for a longer time, before the cell becomes "flat" or "dead". This is because a bigger cell contains a greater amount of the chemicals that react to generate electrical energy.

19.2 Rechargeable batteries

In this section, learners interpret a cutaway diagram of a car battery and answer questions about the functioning of the battery. They then compare the voltage and current they can get from cells in series and cells in parallel.

Most learners will know that cell phone batteries need to be recharged every few days, so this is a good point to start at with them. You can also buy AA-size cells that you can recharge using the ESKOM mains or photovoltaic cells that transfer energy from the sun.

19.3 Photovoltaic cells

Learners read an explanation of how photovoltaic cells work, and then answer questions about the applications of photovoltaic cells.

Finally, learners answer questions that cover the whole chapter.

If some learners want to try making a cell using a lemon or a potato at home, give them the following advice:

- You won't get a torch bulb to glow with a lemon cell or a potato cell, but you should get an LED to glow.
- If you can't get a glow with one cell, try two or three lemon- or potato cells in series.
- Remember that the LED must be connected the correct way round – the long leg must be connected to the positive terminal, which is the copper rod or wire.
- The big screws that you see in the lemon and the potato are zinc-coated screws, not steel screws and not brass screws. The zinc metal (Zn) gives up electrons more easily than iron or steel (Fe), and that is why it works better than iron.

The activity on making a cell and a battery (pages 272–273) is based on the work of Alessandro Volta, in about 1799. He was the first person to build a battery and create a steady flow of electricity. Up to that time, everyone who worked with electricity could only generate static electric charges. After Volta announced his discovery, people all over the world began to make batteries and do experiments with electric current.

You could show your class videos about his work. You can see one such video at this link:

https://www.youtube.com/watch?v=edMN7P5oCaY

19.1 Electrochemical cells and batteries

In Chapter 17, you used cells such as the one in Figure 2 below.



Figure 2

The cells have a positive terminal and a negative terminal. The positive terminal is the knob on the top of the cell and the negative terminal is the flat end of the cell. The terminals are marked + for positive and – for negative. Find the + and – marks on the cell or battery you have.

The voltage of a cell is also shown on it. Find the number on the cell or battery you have. It will be 1,5 V or 9 V. The voltage is the amount of energy that the cell can give to the electricity.

In Natural Sciences this year, you will learn about chemical reactions. An "electrochemical cell" uses chemical reactions between substances inside the cell to produce electrical energy.

What is inside a cell? LB p. 270

You can buy two types of electrochemical cells. The pictures below are called "cut-away diagrams". The cell is drawn as if the outer covering has been cut away to show you the inside.

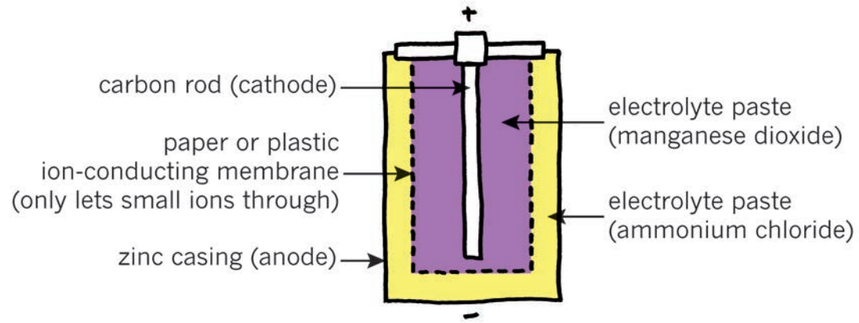

Figure 3: A zinc-carbon cell

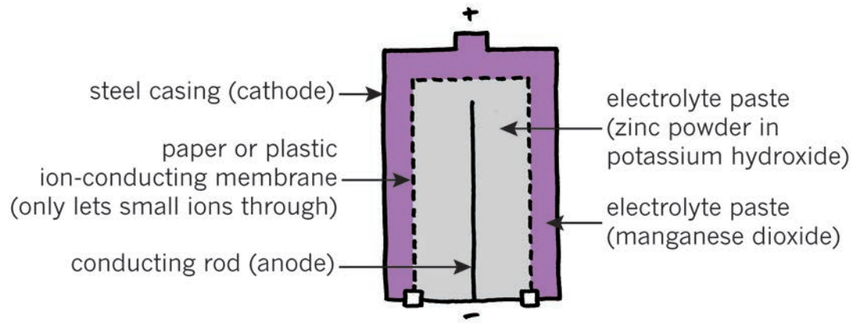

Figure 4: An alkaline cell

The zinc-carbon cell in Figure 3 is a less expensive kind of cell that does not last as long as an alkaline cell. Both types of cells have a "positive electrode" and a "negative electrode", and these electrodes are in a syrupy substance called an "**electrolyte** paste."

The **electrolyte** in the alkaline cell contains potassium hydroxide, which is an alkali. This is the reason for the name of the cell.

In the zinc-carbon cell, the negative electrode is made of zinc metal. This zinc has been shaped into the casing that contains the paste of electrolyte. Outside the zinc casing is a thin steel casing, which prevents you from seeing the zinc.

1. Which part of the zinc-carbon cell is the positive electrode?

   the carbon rod

In the alkaline cell in Figure 4, the steel casing is the positive electrode. The knob on the top of the cell is part of the casing. The casing is usually wrapped in plastic, except for the knob at the top.

2. Which part of the alkaline cell is the negative electrode?

   the conducting rod

Make a cell and a battery

LB p. 272

This activity has two parts. First, each team in the class will make one cell. Then all the teams will connect their cells to make a battery and light a light bulb.

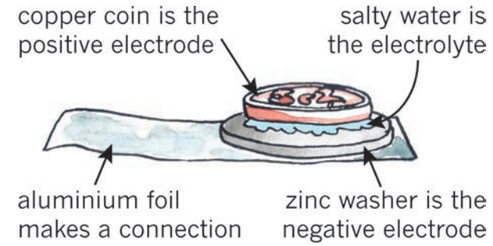

Figure 5: A home-made cell

Each team needs:

- two 5-cent coins or pieces of copper of about the same size,
- a **galvanised** metal washer, which is a disc with a hole in the middle,
- a piece of cloth or cardboard about the same size or slightly smaller than the 5-cent coin, soaked in salty water,
- a piece of cooking foil, about the size of two fingers next to each other, and
- sticky tape.

Galvanised means it's coated with zinc.

Your teacher needs:

- a voltmeter or multimeter,
- a bowl of salty water – 1 teaspoon of salt to 100 ml of water,
- a light bulb,
- a beeper that will work at 3 volts, and
- six crocodile-clip wires, three insulated with red plastic and three with black plastic.

Part 1: Make your cell

- Fold the cooking foil lengthwise, so that you have a long piece that is double in thickness. Put it on the table. The foil is made of aluminium, which is a good conductor.
- Squeeze the salty water out of the cloth.
- Next, put the zinc washer on the foil, put the wet cloth on the washer, and put the copper coin on top of the wet cloth.
- The cloth must not hang over the zinc washer, and the salt water must not run down the sides of the coin and washer. If this happens, it will create a short circuit between the copper and zinc, which you don't want.

The zinc washer is your *negative electrode*, the copper coin is your *positive electrode*, and the salt water is your *electrolyte*.

Now you have made a cell. The cooking foil is the negative terminal where you can connect the voltmeter.

Call your teacher to measure the voltage!

The voltmeter will show a voltage of slightly less than 1 volt between the copper and the zinc.

LB page 273

Part 2: Make a battery

Each team should bring their cells to the front table and connect the cells as seen in Figure 6 below.

You will connect six cells, but Figure 6 only shows four cells, to make the picture easier to understand.

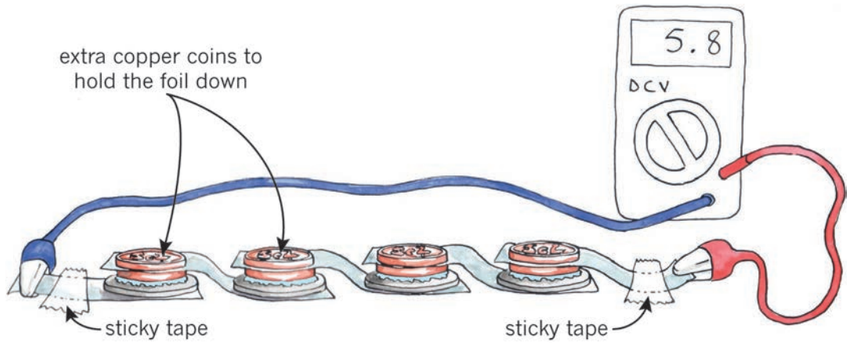

Figure 6: Connecting cells in series to make a battery

You have two 5-cent coins. The first one is the positive electrode of the cell, and the second 5-cent coin is there to press the foil down on the first coin to make good contact.

Use sticky tape to hold the cooking foil down on the table, and connect wires to the ends. The ends of the foil are your terminals.

Your teacher will measure the voltage of the whole battery. With six cells, the voltage of the battery will be about 6 volts or slightly less.

When you connect cells in series, you can say that you make a battery of cells, or simply a battery.

Now connect a light bulb to the positive and negative terminals of the battery. Does the light bulb glow?

Connect a beeper to the positive and negative terminals. Remember to connect the red wire to the positive terminal. Can you hear it beep?

1. What are the two different metals used for the positive and negative electrodes?

   copper for the positive electrode; zinc for the negative electrode

2. How is the voltage of the battery different from the voltage of one cell?

   The voltage of the battery is bigger than that of one cell. It is more or less equal to the voltage of one cell multiplied by the number of cells in the battery.

Batteries do not provide the full amount of volts

Before you connect the bulb or beeper, the battery has energy but it is not producing a current, and its voltage is about 5,8 V. As soon as you connect the bulb or beeper and the battery makes a current flow through the circuit, the voltage drops to about 1,8 V. This happens because the current loses a bit of its energy in the battery as it passes through the salt water and all the connections at the electrodes. You call this the "internal resistance" of the battery.

LB page 274

19.2 Rechargeable batteries

Car batteries are rechargeable LB p. 274

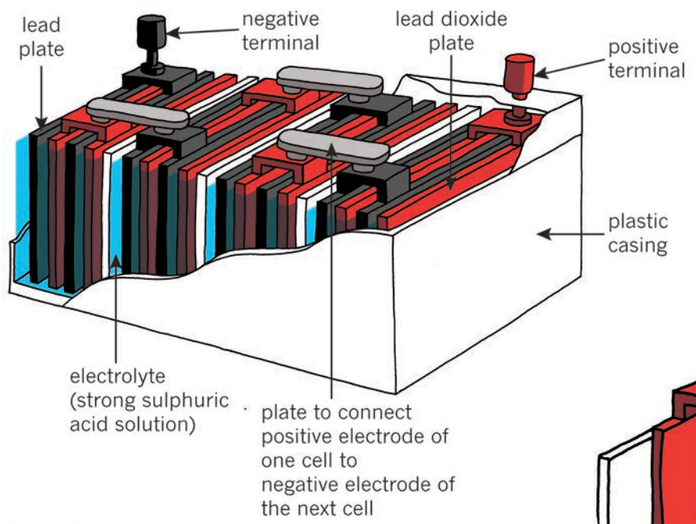

Figure 7: A car battery

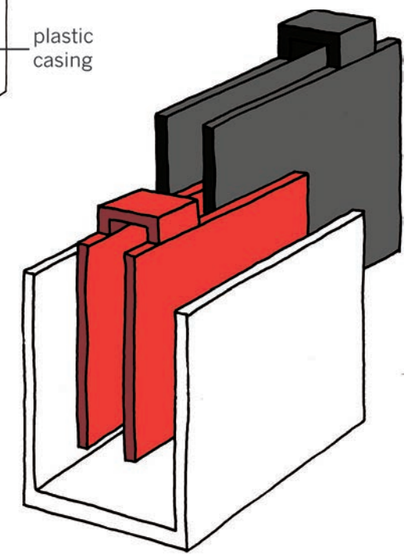

Figure 8: One of the cells in a car battery, shown after it has been taken apart

Figures 7 and 8 show the inside of a car battery. The colour red is used to show the positive electrodes, and dark grey is used to show the negative electrodes. The colour blue is used to show the liquid electrolyte. The electrodes and electrolyte do not really have these colours. Everything inside a battery looks mostly grey.

A car battery has six cells and it can give energy at 12 volts. To keep the diagram in Figure 7 simple, only four cells are shown.

1. What kind of diagram is Figure 7?

   a cut-away diagram

2. What is the positive electrode in each cell made of?

   lead dioxide

3. What is the negative electrode made of?

   lead

4. What kind of electrolyte is between the electrodes?

   a strong solution of sulphuric acid in water

5. Are the cells in a car battery in series or in parallel?

   in series

LB page 275

6. A car needs 12 volts and a very big current to turn the starter-motor and start the engine. Sometimes, on cold mornings, a car won't start. A mechanic can test the battery, and might say "There is one dead cell in this battery". If the battery has a dead cell, what voltage will the battery give?

   Zero volts, since one of the cells in the series is dead, no current can flow through it.

7. On a voltmeter, the battery might show that it will give 12 volts, but when you try to start the car, it won't start. Give a possible reason why the battery is not strong enough to start the car.

   The battery cannot give a big enough current to the starter motor.

8. What can you measure to test your idea?

   Measure the voltage when somebody turns the key of the car and the battery has to produce a big current. You will find that the voltage is quite low then.

A car battery is different to the cells and batteries we usually buy. When we have taken all the energy from the battery, we can recharge the battery and give it energy again. A motor car has a "generator" or "alternator" that takes energy from the engine and gives it to the battery while you drive the car. You will learn about generators in the next chapter. A cell phone battery is also a rechargeable battery.

Batteries with cells in series or in parallel — LB p. 275

In Chapter 17, you learnt about connecting bulbs in series or in parallel. You can also connect *cells* in series or in parallel. Look at the two figures below.

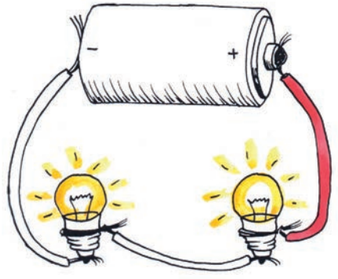

Figure 9: Bulbs in series

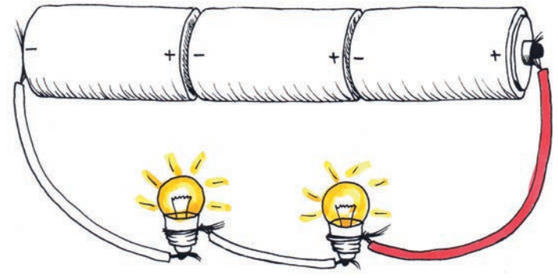

Figure 10: Cells in series and bulbs in series

The bulbs in Figure 10 glow brighter than those in Figure 9 because they share the 4,5 V from the cells in series, so they get 2,25 V each. The bulbs in Figure 9 share the 1,5 Volts from one cell, so they get only 0,75 V each.

LB page 276

Now look at Figures 11 and 12:

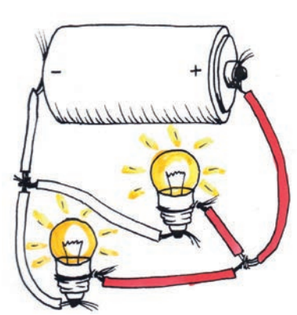

Figure 11: Bulbs in parallel

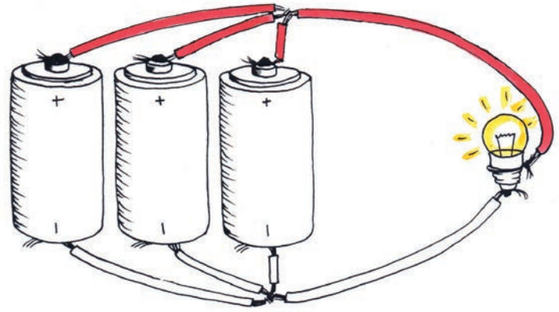

Figure 12: Cells in parallel

In Figures 11 and 12, each bulb gets 1,5 V. Therefore, the bulbs in these figures glow brighter than those in Figure 9 (0,75 V per bulb), but dimmer than those in Figure 10 (2,25 V per bulb).

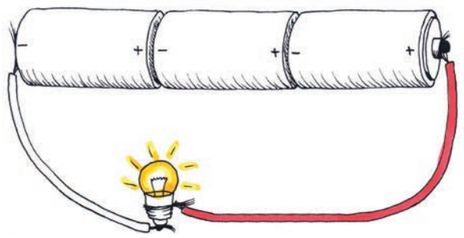

Figure 13

1. Compare the circuits in Figures 12 and 13. Each circuit has three cells and one light bulb, but the components are connected differently.
   (a) In which circuit will the light bulb glow the brightest? Explain your answer.

   The light bulb in Figure 13 will glow the brightest, because the three cells in series give it 4,5 V, whereas the three cells in parallel give only 1,5 V to the light bulb.

   (b) In which circuit will the light bulb glow for the longest amount of time before the cells are "dead" or "flat"? Explain your answer.

   The cells in Figure 13 will become "dead" or "flat" quicker, because they give their energy to the light bulb faster (at a greater rate) than the cells in parallel in Figure 12.
   Therefore, the light bulb in Figure 12 will glow for the longest time.

19.3 Photovoltaic cells

This photo shows a type of energy input device that you learnt about in Chapter 17. In this device, the energy it gives does not come from reactions between chemicals. Instead, it gives energy that comes from light. This device is called a photovoltaic cell. Photovoltaic comes from "photo" meaning "light" and "voltaic" meaning you can get volts from the device.

The black parts in this picture are a special substance called a semiconductor. This semi-conductor substance is made of thin layers, like sheets of plastic laid on top of each other. When light hits these special layers, the energy of the light is given to electric charges in the layers. The positive charges gather on one side and the negative charges on the other side.



Figure 14: Photovoltaic cells on a pole

When charges are separated like this, there is a potential energy difference between them. If you connect wires to the positive and negative sides, the charges will flow through an output device such as a bulb, beeper or motor.

People often store the electrical energy generated by photovoltaic cells in a rechargeable electrochemical battery. The photovoltaic cells generate electrical energy during the day when the sun shines, and this energy is then stored in the rechargeable battery. When it is dark at night, the photovoltaic cells do not generate any electrical energy. But then people can use the electrical energy stored in the rechargeable battery to power lights and other devices.

Where we use photovoltaic cells LB p. 277

Perhaps someone in the class has a calculator that has a little photovoltaic cell. When you hold the photovoltaic cell in sunlight, the calculator can switch on. It will work even if you move it into the shade since it has a little battery that stores the energy.



Figure 15: Photovoltaic cells in a calculator

Photovoltaic cells can be very big. They can be big enough to cover the roof of a house.

The house then gets its electricity from sunlight. You might also see photovoltaic cells outside a shop where you go to recharge your cell phone.

1. Why do you think the shop has photovoltaic cells outside instead of inside?

   There is more intense light outside, so more light energy.

2. On which side of the roof of a house will you put photovoltaic cells? Why?

   On the northern side, so that it faces towards the sun in winter.

What have you learnt? LB p. 277

1. Copy and complete the following sentence:
   A chemical reaction inside an electrochemical cell produces electrical energy.
2. What kind of cell does *not* use chemical reactions to produce energy?
   a photovoltaic cell
3. When you connect the terminals of cells in series, you connect positive to negative to positive to negative, and so on. The cells don't have to lie head to tail. They can lie next to each other. Copy the picture on the right. Draw wires between the terminals of these cells to show how you would connect them in series.

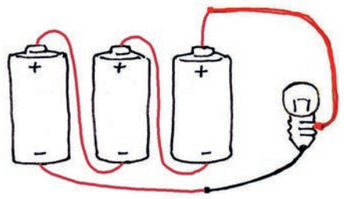

Figure 16

Note to the teacher: Many devices in which you put two or four AA cells in series have the cells side by side, so that it seems as if they are connected in parallel. But if you look at the wiring between the cells, you will see that they are connected in series.

LB page 278

4. If you connect the three 1,5 V cells in series, what voltage will the battery give you?
   4,5 V
5. Copy the picture in Figure 17. Draw wires between the terminals of these cells to show how you would connect them in parallel.
6. If you connect the three 1,5 V cells in parallel, what voltage will the battery give you?
   1,5 V

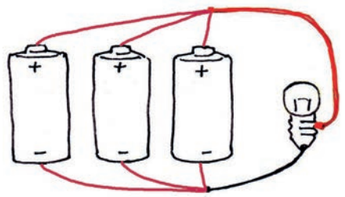

Figure 17

Something you could try at home

You can make a cell using a lemon or a potato, with a piece of zinc-coated metal and a piece of copper. These cells work in the same way as the cell you made in Figure 5. The lemon or the potato plays the same role as the piece of cloth or cardboard soaked in salty water. They are electrolytes through which certain small ions can move to complete the circuit. They are also membranes that prevent other, bigger ions, such as the metal ions, from moving from one electrode to the other.

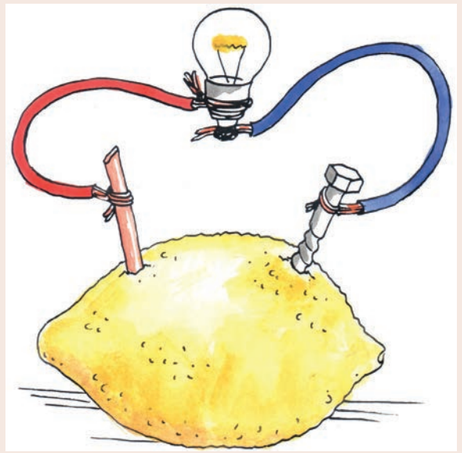

Figure 18: A cell made using a lemon

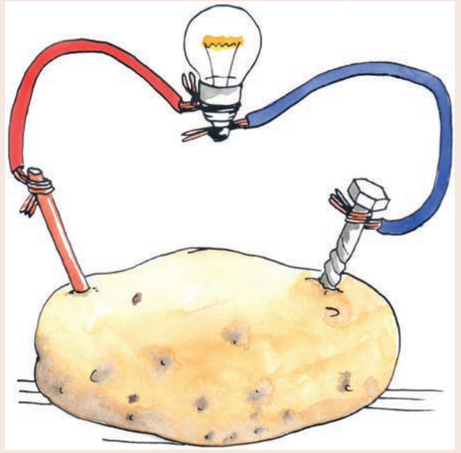

Figure 19: A cell made using a potato

Next week

Next week, you will learn how electricity is generated and distributed around the country, and about the environmental and social impact of electricity generation.

Read about where electricity comes from in Chapter 20, on pages 282 to 285 in the Learner Book. The environmental impact of burning coal and other fuels is also discussed there.

Chapter 20
Generating electricity for the nation

LB page 279

In this chapter, you will learn about the various ways in which electricity is generated in different types of power stations. You will also compare the advantages and disadvantages of different types of power stations.

You will learn how electricity is distributed from the power stations to different parts of the country, to reach the people who use it.

20.1 How electricity is generated in coal power stations 351
20.2 Other types of power stations 356
20.3 Transmission of electricity across the country 366

Materials required for this chapter:

For the practical task in Section 20.1, each team (of 2 learners) should be given:

a 1 m length of solid core copper wire

a short section (approximately 100 mm) of broomstick (or other similar cylindrical object) to roll the wire onto to form a coil

two insulated copper wire leads (approximately 200 mm long) with crocodile clips on each end

a bar magnet

a "sosatie" stick and a blob of "Prestik" to spin the magnet

light bulb in a light bulb holder

This chapter describes how electricity is generated and distributed throughout South Africa.

It firstly describes how coal-fired power stations work. It then goes on to explain how other power stations are sometimes designed to use fuels other than coal – or generate electricity from other forms of energy, like wind, sunlight or moving water.

Learners consider the advantages and disadvantages of these forms of electricity generation.

20.1 How electricity is generated in coal power stations

This section includes an optional practical task. If time and resources do not allow learners to do the task themselves, then you should do a demonstration of it to the whole class.

Briefly introduce the chapter and explain how electricity is generated in a thermal power station. Explain how the movement of a magnet in close proximity to a coil of copper wire causes current to flow in the wire. Then provide learners (in pairs) with the components they need to construct the simple generator shown on page 282 of the Learner Book.

Complete the lesson by:

- clarifying the way in which kinetic energy (movement) is converted into electrical energy in thermal power stations, and in the simpler examples described in the chapter,
- ensuring that learners complete the questions on the advantages and disadvantages of coal-fired power generation, and
- leaving time at the end of the lesson to allocate a topic to each learner from the five topics described in Section 20.2. For homework, each learner should read the topic that has been allocated to them, and compare that form of power generation with that of coal-fired power stations. They must make notes of the comparison, and bring those notes to the next lesson.

20.2 Other types of power stations

Start by giving learners 20 minutes to use their notes to write a detailed comparison of the system of electricity generation that they have investigated for homework, with coal-fired power stations. The comparison should indicate an understanding of the:

- nature of the different inputs into each of the two systems; and
- advantages and disadvantages of each system.

Then, invite two learners to each discuss their comparisons with the whole class.

In the next lesson, all learners must hand in their written comparisons to you. Therefore, they should complete this for homework. You should work through these, give feedback, and hand it back to learners within a week.

20.3 Transmission of electricity across the country

Start the lesson by describing:

- the challenge of distributing electricity from the source (the power station) to the consumers,
- the need to change (transform) voltage and current at various important stages in this process, and
- the physical infrastructure needed for this distribution.

Finally, learners answer questions that cover the whole chapter.

At the end this lesson, collect the written comparisons that learners completed for homework, as well as their answers for the last set of questions.

LB pages 280–281

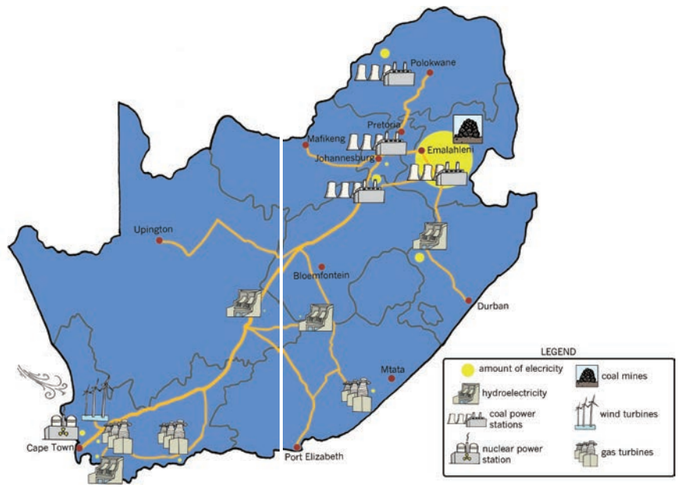

Figure 1: The locations of different types of power stations across the country

LB page 282

20.1 How electricity is generated in coal power stations

When you switch a light on, where does the energy in the bulb come from? You can control the energy with a switch, but what is behind the switch?

In this chapter, you will find the answer to these questions, and find out where the power is generated. Before you investigate the country's electricity supply, you will look at the ways electricity can be generated, and how this affects your daily life.

South Africa uses many power stations for its electricity supply. There are different types of power stations: coal, nuclear, hydroelectric, gas, wind and solar. Figure 1 shows where in South Africa these different types of power stations are located.

There are no solar power stations in South Africa yet, but plans are in progress to start building them.

You will start this week by learning about coal power stations for two reasons:

- Most of the electricity in the country, about 85%, is generated by coal power stations.
- Coal power stations use the technologies of generators and turbines that are also used in most other types of power stations.

Generators

There are three main systems that give us energy for lights, computers, cell phones and all other electrical appliances. You can get energy from batteries, photovoltaic panels and generators.

The main source of electricity in South Africa comes from large generators. These work exactly the same as any small generator you might come across. It is important to understand how a generator works, as it is used in most types of power stations.

How a generator works

If you move a magnet near a coil of copper wire, you will create a voltage across the end of the copper wire. Look at Figure 2.

If you connect a bulb across the ends of the wire, a current will flow around the circuit. To make the current bigger, you can use more copper wire in the coils, use a stronger magnet, or move the magnet faster.

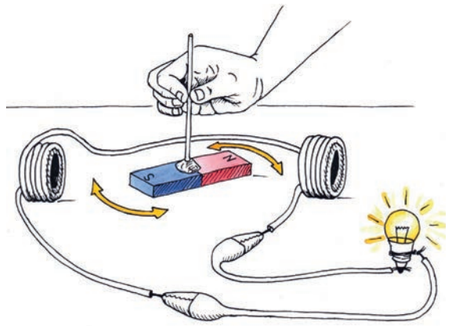

Figure 2: A home-made generator

If the person in the picture leaves the magnet on the table, how much current will flow in the circuit? Your answer can be "a big current", "no current" or "a small current". Give a reason for your answer.

No current will flow because no kinetic energy is supplied, in other words the magnet is not moving.

Now look at the girl on the bicycle. She is pedalling fast and has a generator connected to the back wheel of her bicycle. A bicycle generator is also called a "dynamo".

The dynamo gives energy to the lamp only when the roller is spinning. The girl on the bicycle has to pedal harder than without the dynamo, because she is transferring some of her energy to the dynamo. So her pedaling energy is used to move the wheel as well as to light the lamp.



Figure 3: The dynamo on a bicycle

If you open a dynamo, you will see that it has copper coils similar to the drawing in Figure 2. As the girl pedals, the copper coils spin inside the magnets, and this movement generates electricity.



Figure 4: A bicycle dynamo and light attachment



Figure 5: The exposed copper coils in a dynamo

Power stations have big dynamos called generators. They work exactly the same way as the dynamo in the pictures above but are much, much bigger! They also require a lot more energy to turn than only one person pedalling. In the next section, you will learn the various ways energy is provided to these big dynamos.

Thermal power stations

Thermal means "caused by heat". In thermal power stations, turbines are driven by steam. The steam is formed by evaporating water through a source of heat. The water is heated to form high-pressure steam by using a heat source such as burning coal or gas, nuclear reactions, or light from the sun. The water is turned into steam that drives a turbine, which makes an electrical generator turn. An electrical generator can also be called an "alternator". After the steam has been used, it is cooled down so that the water can be used again.

Most of the world's energy comes from burning **fossil fuels** such as coal, oil or natural gas. This results in high levels of air pollution, particularly from greenhouse gases that contribute to climate change. Fossil fuels will run out in the future.

Fossil fuels are carbon-based fuels that are taken from the earth, and are made of the remains of living things that died millions of years ago.

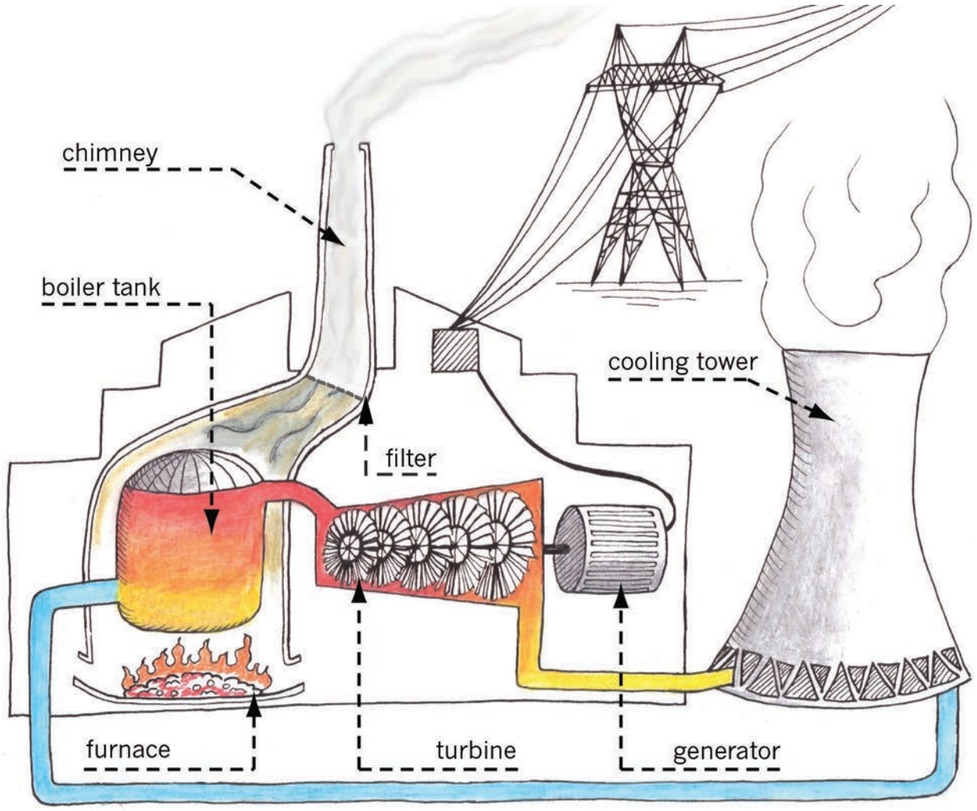

Figure 6: A coal-fired power station

Coal-fired power stations

LB page 285

The energy conversion process starts with the burning of coal that generates heat to convert water into steam at a very high temperature and pressure. The heat and pressure energy contained in the steam is used to drive the turbines, converting it into a rotational movement, in other words kinetic energy. You saw an example of this with the bicycle dynamo – it is exactly the same process. There is a generator attached to the turbine shaft.

- **Reasons for using coal as an energy source**

For centuries, coal was the only fuel source available in large quantities. Power stations were built near coal mines so that coal did not have to be transported over long distances.

Most of the coal-fired power stations in South Africa are found in Mpumalanga where huge coal deposits were discovered. Coal power stations are the cheapest way to generate electricity. It is even cheaper in South Africa since the coal here is close to the surface and therefore easy to mine.

- **Impact on the environment**

Burning fossil fuels creates air pollution due to the carbon dioxide that is emitted during the process. The fires needed to produce steam from water emit a lot of carbon dioxide into the air, a lot more than a wood or coal fire in your home does. Coal has been used for centuries to generate heat.

Sulphur dioxide and nitrogen oxide are two other gases emitted from coal-fired power stations that have a negative impact on the environment. Newer power stations use specific technologies to trap these gases so that they are not released into the atmosphere. In the past, when these two gases were released from coal-fired power stations, they caused "acid rain". Acid rain is rain that contains high levels of sulphuric or nitric acid, caused by the water mixing with sulphur dioxide and nitrogen oxide.

Scientists and engineers are working on plans to capture carbon dioxide and store it underground, but this is expensive and has not yet been done on a large scale anywhere in the world.

Questions on coal-fired power stations LB p. 285

1. Draw up a table with two columns, headed "Positive" and "Negative". Write what you see as the positive and negative aspects of using this type of fossil fuel to generate electricity.

Positive	Negative
cheap	It emits greenhouse gases, mostly carbon dioxide, which contributes to climate change.
easily available in large quantities	Pieces of natural land have to be dug up to mine the coal.
old well-known technology with little risk of serious accidents	Coal mines are not pleasant to look at.
	There is a small amount of coal dust, ash and soot pollution.
	It takes very long to switch a coal power station on or off.
	There is a limited amount of coal that can be mined. It won't last forever.

2. What is the energy source mainly used in South Africa for conversion into electrical energy?

   coal

3. Why do you think the energy source in question 2 above is not the ideal energy source to be used?

   It releases a lot of greenhouse gases that contribute to climate change. This can cause floods, droughts and other severe weather changes in future.

20.2 Other types of power stations

Your teacher will divide the class into five groups, A to E. Each group will do the reading and questions for only one other type of power station. **Work individually.**

Topic A: Gas turbine power stations

In a gas turbine, burning gas at a very high temperature and pressure flows and expands through a turbine, making the turbine blades turn. Sometimes the exhaust gas is still very hot, and that can be used to heat water to also power a smaller steam turbine.Gas is also a fossil fuel, and is normally found underground in areas where coal or oil is present.

Gas turbines in South Africa are equipped to burn a variety of fuels, ranging from oil to gas. Gas turbines have advantages over coal-burning power stations because of their design. Maintenance is done considerably faster, resulting in continuous availability of power.

The **national grid** is the network of transmission lines that are connected and supplied by all the power stations in the country.

Gas turbines are also capable of being started within minutes and without an outside power source, which is very important. If the **national grid** had to suffer a complete breakdown, the gas turbines can be started and will generate power to start the other power stations.

There are four gas turbine power stations in South Africa.



Figure 7: A gas turbine power station

The future of gas turbines

South Africa has only recently started using gas for power stations so there is still a supply that will last for many years. Two of the new gas turbine power stations, Ankerlig in Atlantis, and Gourikwa in Mossel Bay, both in the Western Cape, are going to double the size of their generators in the next few years, adding a lot of power to the national grid.

Reasons for using this type of energy source

As explained earlier, the ability to start a power station without power from the same network is very important for the national grid. There is still plenty of gas available in the world, however, in South Africa, only small amounts can be mined. After pipes have been placed into a **gas field** it will supply the power station without needing to be mined or transported.

A **gas field** is an underground area where organic matter has decayed to form large pockets of gas trapped by layers of rock.

Impact on the environment

Burning gas produces much less sulphur dioxide, nitrogen oxide and ash than burning coal. But it is a fossil fuel, so it still produces carbon dioxide pollution.

Do you think gas-burning power stations will have a big impact on generating electricity in South Africa?

Questions on gas turbine power stations LB p. 287

1. Write down the positive and negative impacts you think burning gas for electricity will have.

Positive	Negative
It can be switched on very quickly when extra power is needed for the national grid.	It emits greenhouse gases, mostly carbon dioxide, which contributes to climate change.
It burns cleaner than coal, meaning it emits much less soot, ash, sulphur dioxide and nitrogen oxides.	It is more difficult to mine for gas, since very deep holes need to be drilled, often in the seabed.
	There is a limited amount of natural gas that can be mined. It won't last forever.
	Note: Some learners may think of the following points. Gas needs to be stored and transported with special safety precautions, as it can explode easily if it leaks.

Topic B: Nuclear power stations



Figure 8: A nuclear power station

There is a nuclear power station, called Koeberg, close to Cape Town.

LB page 288

Radioactive substances give off energy that is dangerous to living things. It can cause cancer and other health risks, so it is important that people are shielded from radioactive material.

Unlike coal-burning power stations, a nuclear power station operates using three separate water systems. One of the biggest fears that people have about nuclear power stations is that **radioactive** material might escape and pollute the air of nearby areas.

It is very important for the three systems to be separate. The first system, the radioactive water in the reactor, is in a closed system. It does not come into contact with the other two systems and therefore does not contaminate the water in these systems. The second water system cools down the radioactive steam that has driven the turbines. It flows through the condensers where the third water system cools the steam back into water. The first water system circulates back to the steam generator where it is turned into steam again.

The third cooling system for the condensers uses sea water at a rate of 80 tons per second to cool the steam. After it has cooled down, the water is returned to the sea.

Reasons for using this type of energy source

Many places don't have a supply of fossil fuels to power generators. Small amounts of nuclear fuel can generate enormous amounts of electricity.

Nuclear power stations require very little maintenance. Because the water used in the first system is recycled, there is very little waste of precious water. The cooling water is unpolluted and returned to the sea.

Impact on the environment

Radioactive material creates radioactive waste, which is extremely dangerous. Although the amount of waste is very small, it remains active and dangerous for many thousands of years! There is currently no long-term solution for the safe storage of radioactive waste. The best solution at the moment is to put it in very thick layers of concrete and lead, and bury it where no one is likely to dig it up. Many countries do not use nuclear fuel for power since they are concerned that even the buried waste will harm the environment. Nuclear power has been used around the world since the 1950s as an alternative source of energy.

Questions on nuclear power stations LB p. 288

1. List the positive and negative aspects of this type of energy in a table.

Positive	Negative
No greenhouse gases emitted, so it does not contribute to climate change.	Nuclear (radioactive) waste is very toxic and it can remain dangerous for thousands of years, so it has to be stored very safely.
A small amount of nuclear fuel can generate a very large amount of power.	Because of the complicated technology and the very strict safety precautions needed, nuclear power stations are much more expensive than coal-fired power stations.
Nuclear power stations require very little maintenance.	The technology to refine the nuclear fuel, uranium, is complicated and expensive.
Nuclear power stations use very little water.	There is a limited amount of nuclear fuel, uranium, that can be mined. It won't last forever.
	If radioactive material accidentally leaks, it can cause great damage to the environment, and it can last hundreds of years.

Topic C: Solar power

LB page 289

Solar power means that sunlight is used as a source of energy to generate electricity. Solar power is a promising option in South Africa since it is such a sunny country. The panels on some roofs and poles that are used to *generate electricity* directly from sunlight are called **photovoltaic panels**. A photovoltaic panel is a flat sheet containing many photovoltaic cells. Figure 14 on page 276 shows such panels.

Some houses have panels on their roofs that use sunlight to *heat water,* to use as hot water. These are called **solar hot water panels** or **solar geysers**. Figure 11 on page 8 shows a solar geyser. Using a solar geyser saves electricity, because less electricity is needed to heat the water. But solar geysers do not generate electricity.

Solar energy is a very good alternative for areas that are far away from the national grid, such as farms, rural clinics and water-pumping stations. In these cases, photovoltaic cells can be used to produce electricity directly from sunlight, and solar geysers can be used to heat water for use in houses and buildings.

For larger scale solar power generation, companies have started building and operating solar power stations in the sunny Northern Cape, since 2012. The companies sell the electricity to ESKOM. There are mainly two kinds of solar power stations: photovoltaic power stations and solar thermal power stations. Both these kinds of power stations use very large areas of land, because the more surface area is used the more sunlight can be captured.

Photovoltaic power stations

A photovoltaic power station consists of thousands of photovoltaic panels that are installed on an open piece of land. The photovoltaic panels are tilted towards the sun. Sometimes the panels are mounted on mechanisms that automatically change the angle at which it is tilted throughout the day, so that the panels always face the sun directly. The tilting may also be adjusted for the season.

Solar thermal power power stations

A solar thermal power station concentrates sunlight to heat water to turn it into steam. Thousands of large mirrors reflect sunlight onto a water tank at the top of a central tower. The very high concentration of sunlight shining on the tank, heats the water to about 600 ˚C, which makes it turn into high-pressure steam. The steam drives a turbine, which in turn drives a generator, just like in a coal-fired power station. There is equipment that continually rotates and tilts each mirror as the sun's position in the sky changes, so that the mirrors keep on reflecting sunlight exactly at the tank.

LB page 290

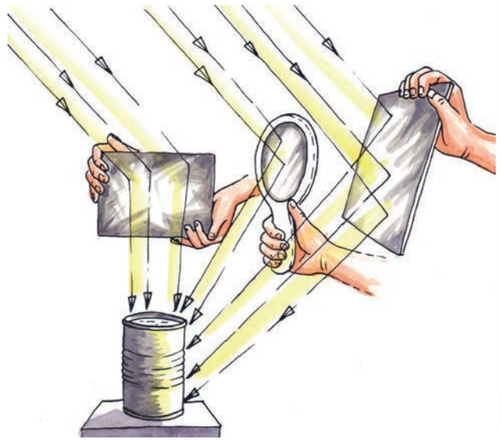

Figure 9: Many mirrors can be used to reflect a lot of sunlight onto a small tin can, to heat water in the can.



Figure 10: Thousands of mirrors at a solar thermal power station all reflect sunlight onto a tank on top of a tower. That is why the tank is shining so brightly.

In some designs of solar thermal power stations, molten salt is heated by the concentrated sunlight, instead of water. Salt melts at a very high temperature. The advantage of using molten salt, is that the very hot salt can be stored in a way that it does not lose its heat quickly. So at night, water can still be pumped around the salt containers to turn the water into steam for the turbine, in order to keep on generating electricity.

Reasons for using this type of energy source

Solar energy is a realistic option in any sunny country. Solar energy can be used in areas far away from the national grid and can be set up to provide power for smaller communities.

We could take the pressure off South Africa's largely coal-based energy supply by using solar power. This would also give the country a larger overall energy capacity and help us to achieve our target of a 34% reduction in carbon-dioxide emissions by 2020.

Impact on the environment

Solar power produces no pollution. However, the power stations take up a lot of space. This space then cannot be used for farming, houses, nature conservation, or other purposes.

Questions on solar power stations LB p. 290

1. Draw up a table with two columns. Write down the positive and negative aspects of using solar power to generate electricity.

Positive	Negative
No greenhouse gases emitted, so it does not contribute to climate change.	Solar power stations are expensive to build.
No waste is generated during the operation of solar power stations, although some waste is generated to build these stations.	Solar power stations take up very large areas of land that can then not be used for anything else.
The sun's energy is free. Solar power is a renewable energy source.	The power production of a solar power station is not as reliable, since it depends on the season, the time of day, where the sun is in the sky, and the amount of cloud cover. Solar thermal power stations that use molten salt are somewhat more reliable, because the salt stores heat that can be used later when the sun is not shining brightly anymore.
It is possible to use photovoltaic panels for small rural communities that are not connected to the national grid, and far away from the grid.	

LB page 291

Topic D: Hydroelectric power generation

The flow of water can be used instead of steam to drive turbines. In hydroelectric power stations, the potential energy of water stored in a dam is converted into electrical energy. There are two different types of hydroelectric power stations.

- A simple hydroelectric power station uses the downwards flow of water to generate electricity.
- A hydroelectric pumped storage scheme can also pump water back into the dam during times when there is electricity from other power stations that is not being used. Such a scheme plays the role of a rechargeable battery, as it stores electricity when it is not being used. It can also be used in the same way as a simple hydroelectric power station to generate electricity, by letting water flow downwards out of the dam.

Hydroelectricity is renewable and does not pollute the environment. Large-scale hydroelectric schemes are, however, expensive and require the construction of large dams that have an impact on the environment and communities. Imagine you lived along a river, and you were ordered to move because a hydroelectric dam was to be built there. How would you feel about it?

Hydroelectric power stations are able to come online within three minutes. They are therefore convenient to use during times of the day when there is a very high demand for electricity, when this demand is more than the other power stations can provide.

Unfortunately, due to South Africa's limited water resources, only a small amount of electricity can be generated by hydroelectric power stations.

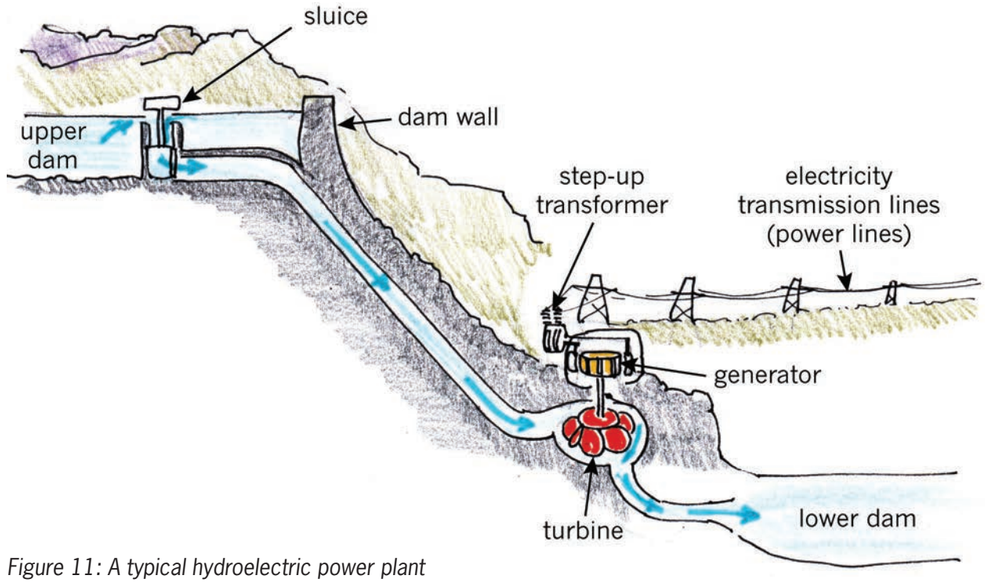

Figure 11: A typical hydroelectric power plant

Reasons for using this type of energy source

It is a renewable energy source and can be used to ensure the country has enough electricity during periods of high electricity consumption. Hydroelectric power stations are cheap to operate, even cheaper than coal-fired power stations.

Impact on the environment

Dams and waterways need to be constructed for a hydroelectric power station. It may be cheap to produce the electricity once the dam is completed, but the costs of building a dam are enormous, and the impact on the countryside can be severe.

An environmental impact plan must be in place, and communities that could be affected have to be taken into consideration. Some people may even have to move because their houses and farms are located where the dam will be built.

Questions on hydroelectric power stations LB p. 291

1. Draw up a table with two columns. Write down the positive and negative aspects of a hydroelectric power station.

Positive	Negative
No greenhouse gases emitted, so it does not contribute to climate change.	Hydroelectric power stations are expensive to build.
No waste is generated during the operation of hydroelectric power stations, although waste is generated to build the stations and dams. The potential energy of water in the mountains is free. Hydroelectricity is a renewable energy source.	Hydroelectric power stations depend on large dams that have to be built. These dams cover large areas of land with water, so the land cannot be used for anything else.
It takes very little time to start up a hydroelectric power plant, for instance when extra power is needed during periods of peak electricity consumption.	The power production of a hydroelectric power stations depends on the season, since it depends on the amount of water available.
Hydroelectric pumped storage schemes can also be used to store energy, when the demand for electricity is lower than the supply of the other power stations.	

Topic E: Wind turbines

For thousands of years, people have used windmills and energy derived from the wind to pump water and to grind grains such as mielies. Today, wind can also be used to generate electricity. Like the sun and water flowing down a river, this is a renewable energy source and does not negatively impact the environment or pollute it. Across the world, huge windmills that generate electricity are being built. These are called **wind turbines**. Often many wind turbines are built close together, in what is called a **wind farm**.

Wind speed and direction change from day to day, depending on the weather and the season. It even changes during the day. We say that wind "fluctuates". Wind cannot be counted on to be available to generate



Figure 12: A big new wind turbine behind a much smaller, old wind pump

electricity – it is unpredictable. But in the long term, there are some patterns in the wind. Scientists do research to see in which places the wind blows harder and more often. They also look at the times of the year, and the times of the day, when there is generally more wind. This allows them to make a rough prediction about the average amount of electricity that a wind farm can produce at different times. When a country has many wind farms and solar power stations, when the wind is not blowing or the sun is not bright in one place, it may be so in another place. So having many wind farms and solar power stations helps to reduce the fluctuations in power delivery.

South Africa already has some wind farms, and more wind farms are being built. The biggest three wind farms are in the Eastern Cape and the Western Cape. There are between 46 and 70 wind turbines at each of these wind farms.

Wind farms are expensive to build. To be worth the cost, a wind farm can only be built in a place where the wind blows strong enough and often enough.

Wind turbines need wind speeds of between 47 and 57 km per hour for full power operation, but they can start generating electricity in winds as low as 11 km per hour. If a gale force wind blows, the turbines shut off automatically at winds over 90 km per hour to prevent damage to the generators.

Reasons for using this type of energy source

Wind is a renewable energy source, and is particularly powerful in coastal areas. It can be used where fossil fuels are unavailable.

Impact on the environment

While it is a clean source of energy in terms of greenhouse gases, environmental impacts can include noise, visual pollution as well as affecting birdlife. The farms need large pieces of land, which in some places can be expensive to buy.

Questions on wind turbines LB p. 293

1. Do you think ESKOM should build more wind turbines?

   Learners' own answers. Ask them to explain their answers.

2. Tabulate the positive and negative aspects of this form of generating electricity.

Positive	Negative
No greenhouse gases are emitted, so it does not contribute to climate change.	Wind turbines are expensive to build.
No waste is generated during the operation of wind turbines, although some waste is generated to build turbines.	To generate a large amount of wind power, you need to cover very large areas of land with wind turbines.

The wind's energy is free. Wind power is a renewable energy source.	The power production of a wind turbine is not reliable, as it depends on how strong the wind is.
It is possible to build small wind turbines for single houses or small communities.	Wind turbines make noise, can be ugly to look at and can kill birds and bats.

LB page 294

20.3 Transmission of electricity across the country

The electricity that power stations generate is distributed across the whole country.

The map on the next page shows the main **transmission** lines that are used to **distribute** electricity from the power stations to different parts of the country.

Transmission means the action or process of sending something.
Distribution refers to the action of sharing something among a number of recipients.

The combination of the main transmission lines and the distribution cables to buildings and other electricity users form a network called the **national grid**. Electricity is fed into the national grid, and it has to be distributed across the country to cities, towns and rural areas.

The South African government announced its policy to provide free basic services to the poor in 2000. The government has focused mainly on electricity supply, which has led to a higher demand on our national grid.

Electricity supply must be consistent and reliable, since electric equipment can be damaged if there are changes in the voltage and current.

It is very difficult to store large quantities of electrical energy. The energy provider must always match the demand of the consumers. These consumers range from households to huge factories, transport systems and the use of heavy machinery.

Specific equipment has to be installed to ensure that the correct voltages reach the users. In this section, you are going to learn about this type of equipment.

As the demand increases, more power stations must be brought on line. This means that the power they generate needs to be added to the national grid.

It is interesting to note that the electricity demand not only varies from day to day, but from minute to minute. The **peak demand** periods are early in the morning and in the evening.

Peak demand means the highest demand during a day.

These pylons transmit high-voltage current between the power stations and the substations.

LB page 295

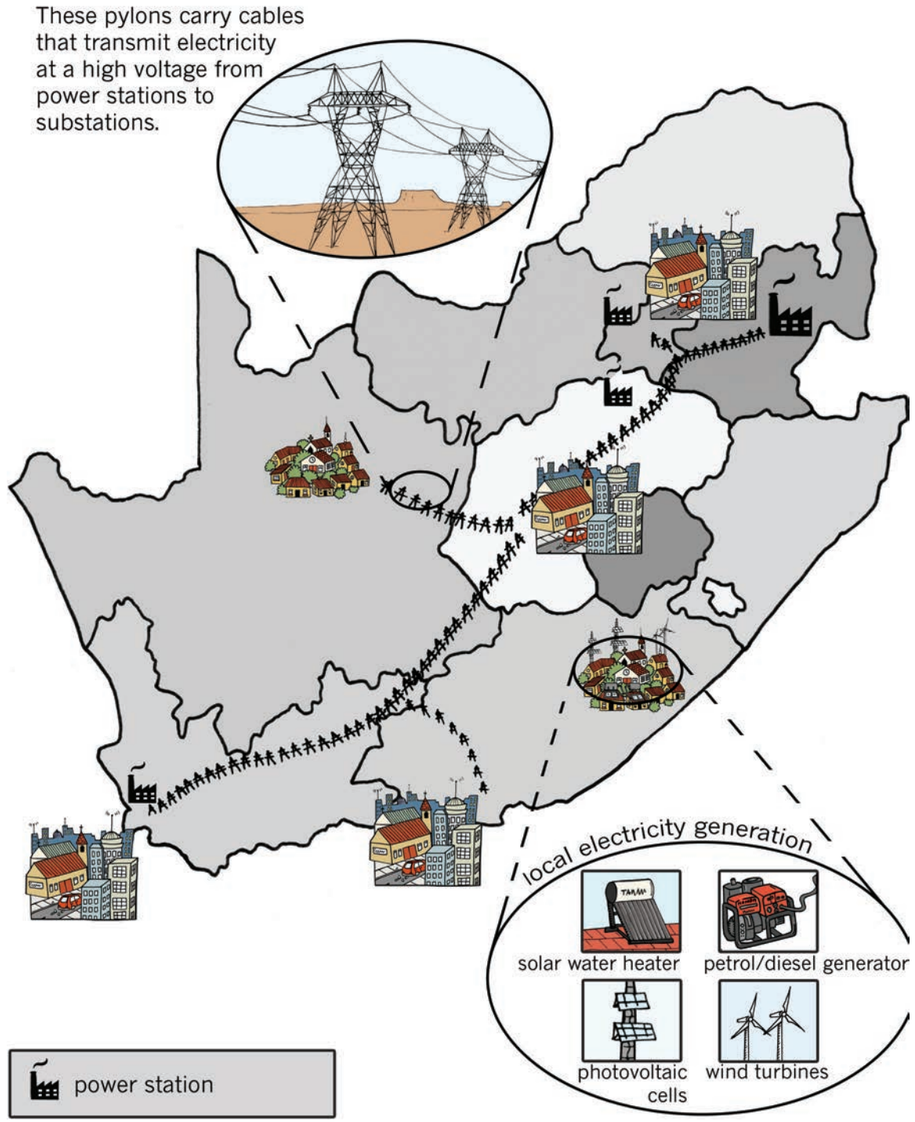

Figure 13: Map of electricity transmission in South Africa. Notice that the grid does not reach all rural areas. Electricity is generated locally in these places.

Step-down and step-up transformers

Electricity is transferred from power stations to consumers over long distances through the wires and cables of the national grid. When a current flows through a wire, a bit of energy is lost in the form of heat. The higher the current, the more energy is lost. To reduce these losses, the national grid transmits electricity at a low current, but this requires a high voltage. Remember Ohm's law!

LB page 296

Step-up transformers are used at power stations to produce the very high voltages needed to transmit electricity through the national grid's power lines. When the electric energy reaches the consumer area, it is transformed, which means changed, to a lower and safer voltage. Step-down transformers are used locally in sub-stations to reduce the voltage to safe levels.

- A transformer that increases the voltage is called "a step-up transformer".
- A transformer that decreases the voltage is called "a step-down transformer".

Figure 14 shows how electricity reaches your house so that you can turn on the lights and watch educational programmes on your television.

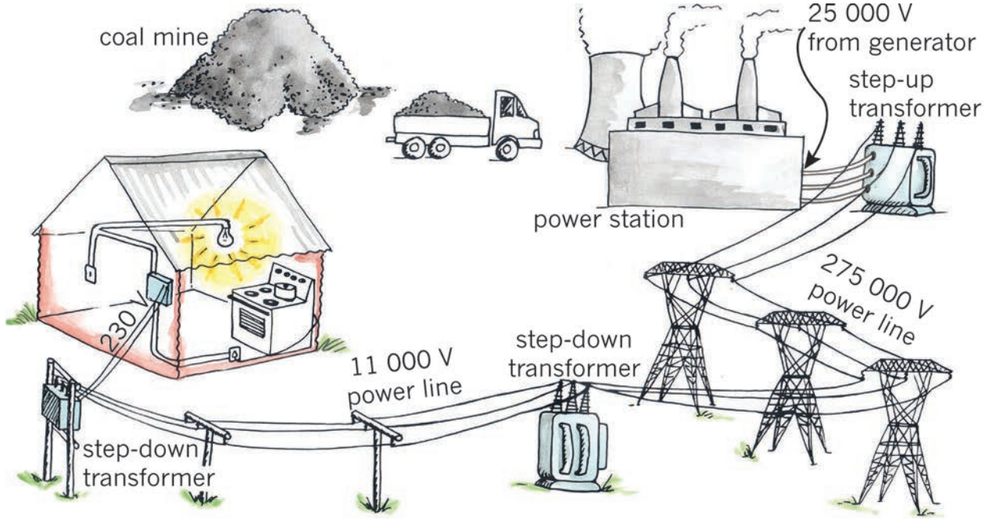

Figure 14: The path of electricity to your home

What have you learnt? LB p. 296

1. Name three renewable ways in which electricity can be generated.

   wind turbines, hydroelectricity and solar power

2. What is the national electrical energy grid?

   The national grid is the network of transmission lines that are connected and supplied by all the power stations in a country to distribute electricity throughout the country. It includes the cables from substations to houses and other electricity consumers.

   The national electricity energy grid is often simply called the national grid.

3. What is the function of a transformer?

   It changes the voltage and current of electrical energy.

4. In the area where you live, what, in your opinion, will be the most suitable energy source to be converted to electricity for your community? Why do you say so?

   It depends on where the learners live:
   Wind energy works best close to the sea where there is a lot of wind.
   Hydroelectricity works best in rainy, mountainous areas.
   Solar power works best in sunny areas.
   Gas is mostly mined in the sea, so it is cheaper to have gas turbines close to the sea. Otherwise, long, expensive and dangerous gas pipelines have to be built.
   It is cheapest to use coal power stations close to coal mines, so that little transport of coal is necessary.

Next week

During the next three weeks, you will do your mini-PAT for this term. You will design and build an alarm system.

Chapter 21 Mini-PAT
Circuits with logic control

LB page 297

In this chapter, which brings you to the end of this term, you will start by revising the circuits you made in Chapter 17 at the beginning of this term. Then you are going to use this knowledge to make an alarm system for a shopkeeper.
You will only do **individual work** during this Mini-PAT.

Week 1: Circuit diagrams and Ohm's Law 377

Revise: The effect of connecting more cells in series
Revise: Circuits with resistors in series and parallel
How a door-operated push switch works

Week 2: Logic gates and truth tables; Design brief and specifications 380

Switches with AND-type control
Switches with OR-type control
Truth tables
Combining AND-control with OR-control
Design brief and specifications ..... [4]
Investigate: Components you could use ..... [3]
Design: Draw a circuit diagram ..... [6]

Week 3: Design, make and communicate 388

Make: Draw the layout of your alarm system in the shop ..... [6]
Make: A cardboard model of the shop ..... [10]
Design: A door-operated push switch ..... [8]
Make: The switches for your alarm system ..... [12]
Make: Add your circuit to your model of the shop ..... [12]
Evaluate: Test your alarm system ..... [2]
Communicate: Make an advertisement for your alarm system ..... [7]

[Total: 70]



Figure 1: How are the systems in this picture controlled?

Tools required for this chapter:

long-nose pliers with wire-cutting jaws
small screwdrivers
hole-makers (brad-awls)
soldering iron (optional)
scissors that can cut cardboard
craft knives

Materials required for this chapter:

nails
pins
paper clips
wire, galvanised, about 1 mm diameter
wire, copper, insulated
drawing-pins
insulation tape
Prestik
packaging tape
magnets
plastic containers that can be cut into shapes

Week 1

Circuit diagrams and Ohm's Law

Learners do a practical activity to confirm the relationship between voltage and current, and compare the current-voltage relationships in series and parallel circuits. They also interpret a cutaway diagram of a push switch that controls the light inside a fridge.

Revise the effect of connecting more cells in series (45 minutes)

The three-cell battery of 4,5 volts can give more energy to each unit of charge that goes through the bulb, and so the bulb gives out more energy with the 4,5 volt battery.

Question 1 refers to "the voltage the battery promises to give". The battery will show a voltage of 4,5 volts on a voltmeter when it is not yet connected in the circuit, but will give only about 4,2 volts when it actually drives a current through the bulb. The reason is that about 0,3 volts is used passing the current through the battery itself, because of the internal resistance of the battery. This "lost" energy makes the battery feel slightly warm while it is working.

The observations made for Question 3 can be summarised in the answers to Questions 4 and 5: The bigger the voltage across the bulb, the bigger is the current through the bulb. In other words, if you increase the voltage across the bulb, you also increase the current through the bulb.

Ohm's law expresses the relationship more precisely than the statements above. Ohm's law says that the current and the voltage are directly proportional to each other (for example, if you double the voltage, you double the current) provided the resistance of the resistor stays the same. In the case of the bulb, the resistance does not stay exactly the same, but slightly increases as the temperature of the filament increases.

Therefore, the answers to Question 4 and 5 are not a statement of Ohm's law but point in the same general direction as Ohm's law.

Revise circuits with resistors in series and parallel (45 minutes)

In Question 1, the single bulb should be very bright (white-hot), two bulbs in series not so bright (yellow), and the three bulbs in series will be quite dim (orange). The change in brightness of each bulb means that the current through each bulb has decreased. The total energy that the battery can give to the current is still the same – about 4,2 volts per unit of charge – but the resistance of the three bulbs reduces the current.

Note the common misconception: Some learners may think that the current has not reduced but the bulbs are dim because they must "share the current". These learners probably think that each bulb consumes or "uses up" a part of the current. This is not what really happens. The correct view is that the current is reduced but is the same through each bulb and through the battery. It is the energy of the current that is transferred (or given away) in each bulb.

Another common misconception: Some learners may think that the battery becomes weaker as more bulbs are added and this is the reason that the bulbs are dimmer. The correct view is that the battery gives roughly the same voltage, no matter how many bulbs you add in series. You can demonstrate this by connecting a voltmeter across the terminals of the battery and adding bulbs in series. The voltmeter will show the same reading or perhaps increase slightly as more bulbs are added. However, each extra bulb gets a smaller fraction of the voltage. For example, with two bulbs in series, each bulb gets about 2,1 volts but with three bulbs in series, each bulb gets about 1,4 volts.

In Question 2, the two bulbs and the three bulbs in parallel should glow as brightly as the one bulb. This is because each bulb is getting the full 4,2 volts across it.

When you actually do this, you may notice that the bulbs become slightly dimmer when you connect the third bulb in parallel. The reason is that the battery now tries to produce a bigger total current because it "sees" a lower resistance in the circuit. However, if the battery is not new, it fails to produce all of that bigger total current and so the bulbs dim very slightly instead of staying the same brightness.

How a door-operated push switch works (30 minutes)

The best use of the week is for learners to design and make different kinds of switches. They may have made switches in Chapter 17 (see page 251). But now, the challenge is different: can they make a switch that they must press or hold all the time to prevent it closing (completing) a circuit?

You can pose the problem to the class like this: Most of the time, we keep the door of a fridge shut. That means the light inside must be off, and that in turn means that the switch must be

open (it must break the circuit). So how does the switch in Figure 6 work to achieve this?

You can let a learner come and draw two diagrams on the board; one diagram shows the switch as it is in Figure 6, and the other diagram shows the movement of the spring when the door swings away around the hinge.

Week 2

Logic gates and truth tables

Design brief and specifications (75 minutes)

Learners have to relate diagrams of circuits with "OR" and "AND" control to real systems such as factory machines and car doors. They interpret the "on" and "off" conditions in terms of a truth table for each system. These tasks lead to a final task for the week in which the learners draw a circuit diagram for a circuit that combines AND with OR control.

Question 3: Truth tables can look mysterious to learners, but you can invite them to sum up the whole table in a simple statement. Here is an example of a statement: If the master switch is closed (on), the passengers can ring the bell with either switch 1 or switch 2. If the master switch is open (off), the passengers can't ring the bell at all.

Challenge the learners with another question: Can the bus driver ring the bell himself, from his driver's seat at the front of the bus? If the learners look down the truth table, they will be able to answer this question. They will also be able to answer the question by looking at the circuit in Figure 11.

Write a design brief and specifications (15 minutes)

You will soon see that the design for Mr Abdullahi's shop is very similar to the circuit for the bus and its switches for passengers to press. But, don't tell the learners that – let them work it out for themselves.

Investigate: Components you could use (15 minutes)

If you don't have beepers or buzzers, you could use small motors. Put a small lump of Prestik on the shaft of the motor so that it is unbalanced. When you run the motor, it will vibrate. Put the motor on a tin can or stiff cardboard box and the sound will be much louder.

Design: Draw a circuit diagram (15 minutes)

The notes you need are in the answers.

Week 3

Design, make and communicate

The learners must draw a sketch of the shop and make a model of the shop in which they will use the switches that give the shopkeeper control of his alarm system. Then, they must design and make the switches, and then fit them into their model. They must evaluate their system and write a truth table for it. Finally, the learners make an advertising poster or brochure for their system.

The learner book does not call for design drawings of the switches, but you can ask the learners to draw their ideas for switches, if time allows. This can be a good exercise to help their thinking, but don't expect them to make the actual switch as drawn on paper. As learners work on their model, they get new and better ideas from the actual materials, so the final model probably won't look exactly the same as the drawings.

Draw the layout of your alarm system in the shop (15 minutes)

Since the textbook has to be used by other learners next year, your learners should copy Figure 12 into their notebooks. To make that less time-consuming, learners are asked to make only a 2D copy of the drawing, showing the top view of the shop.

In class, they draw their wiring plan onto the drawing of the shop. As you move around and look at their drawings, you can get formative assessment information. For example, ask them to point with a finger to show where the current will flow all around the circuit from the battery and back to the battery. Also, ask them to show where the current will not flow if one or the other switch is open.

Make a cardboard model of the shop (15 minutes)

You might feel that the learners' designs will be clear enough if they draw a circuit diagram, so why do sketches of the shop and make a cardboard model? The answer is that you want all the learners to take part in the design discussions: some of them can argue about a circuit diagram, but other learners need to see the physical model before they can join in a discussion. For these learners, a circuit diagram can be a mystery, but if they have a physical model to work with, they can do good creative thinking.

Design an alarm switch (15 minutes)

You can use the pictures of switches on page 251 in Chapter 17 as a stimulus to get them thinking about switches.

Figure 13 shows a switch that would be "on" (closed) when a person's foot presses on it. So, it is not directly useful as a door switch.

Figure 14 shows a springy metal strip that closes (completes) a circuit when the door opens. Ask the learners about the piece taped onto the door: does it have to be metal? What does it do when the door is closed?

Figure 15 uses a magnet to keep the switch in the "off" position (circuit open; circuit broken). When the magnet moves away, the metal strip falls and closes (completes) the circuit. Ask the learners what kind of metal the strip could be made from. In Figure 15, the strip seems to be made from brass or a yellow metal. Would brass or copper work with a magnet?

Make the switches for your alarm system (30 minutes)

For this lesson, you will need a variety of materials and tools. While your learners are designing and developing their ideas for switches, you will be able to see what kind of tools and materials they will need. They will be able to bring some of the materials from home. You should limit them if you don't have other materials available. Sometimes, a learner's design is too ambitious and then they must be able to suggest a simpler way to make the switch.

Add your circuit to your model of the shop (30 minutes)

Make sure that the learners have enough time to adjust their models until they work and they can demonstrate them to the rest of the class. It is very demotivating to learners if the model is not completed to the stage where they can demonstrate it.

Evaluate: Test your alarm system (15 minutes)

Before you begin this stage with the learners, ask them to look back at the specifications they wrote (see the question on page 306). Often, learners become so involved with their model that they forget about the need they are trying to meet, or forget about the person who needs a solution to a problem. Therefore, this evaluation stage is an important checkpoint in their design-and-make process.

Homework: Make an advertisement for your alarm system

At this stage, the learners' drawings/sketches can show changes to the model, to reflect the better ideas they have had during the making stage. This is good, because if they were really going to sell alarm systems, they would improve on their first model. In manufacturing, we usually make some prototypes first, and after that, work on improving the performance and appearance.

Week 1

LB page 299

Circuit diagrams and Ohm's law

This section revises the circuits that you learnt about in Chapter 17. You found that the more cells you connected in series, the brighter the bulb glowed.

Revise the effect of connecting more cells in series (45 minutes)

You will need:

- a cell holder big enough for three cells,
- two or three crocodile-clip conducting wires, and
- a light bulb rated for 3,8 V or slightly more.

Look at the three circuits below:

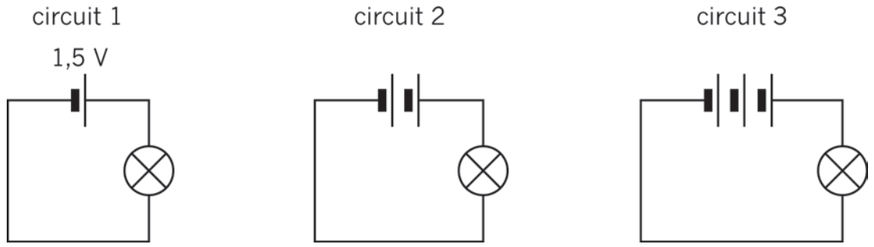

Figure 2: Each cell adds 1,5 V to the battery.

1. What voltage does the battery in circuit 3 promise to give?

   3 × 1,5 V = 4,5 V

2. Predict how bright the bulbs will glow in circuits 1 to 3. To show your prediction, draw brackets around the bulbs in the diagram. Write down the circuits 1 to 3 below each other and indicate next to each one how brightly the bulbs will glow. (⊗) means dim, ((⊗)) means medium bright and (((⊗))) means very bright.
3. Now build each of these circuits and test your predictions. Does the bulb in each circuit glow as brightly as you predicted it would?

The relationship between voltage and current

If the current through the bulb is small, the bulb will glow dimly, and if the current is big, the bulb will glow brightly.

4. Write a sentence about the relationship between the voltage and the current. Use the following phrases in your sentence:
   - "across the bulb",
   - "through the bulb",
   - "the voltage is",
   - "the bigger is the current", and
   - "the bigger".

   The bigger the voltage is across the bulb, the bigger is the current through the bulb.

5. You can state the relationship between current and voltage in another way. Copy and complete the following sentence:

   If you increase the voltage across the bulb, you also increase the current through the bulb.

Your answer to question 5 summarises **Ohm's law**.

Revise circuits with resistors in series and parallel (45 minutes)

For this activity, you will need:

- a battery of three cells,
- three bulbs rated for 3,8 volts, and
- six crocodile-clip conducting wires.

1. The diagrams in Figure 3 show you the circuits you are going to build. Before you build them, write down your predictions of how bright the bulbs will glow on copies of the diagrams, using brackets as you did before. Then connect the components and test your predictions.

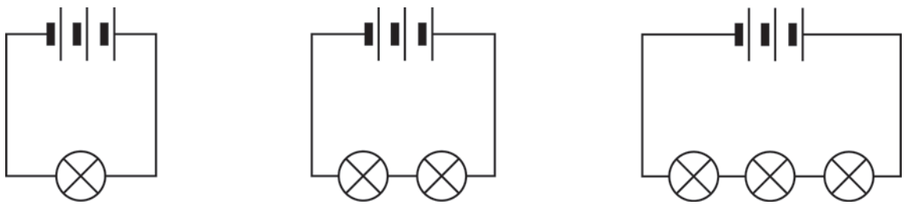

Figure 3: Bulbs connected in series

2. Look at Figure 4, and write down your predictions of how bright the bulbs will glow when they are connected in parallel. Then connect the components and test your predictions.

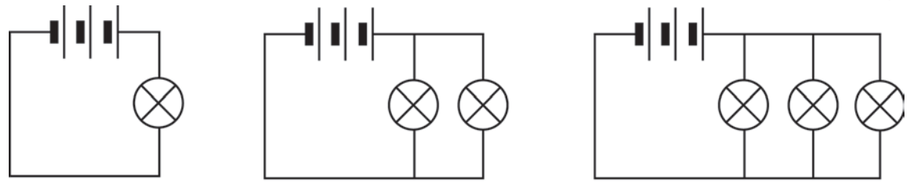

Figure 4: Bulbs connected in parallel

How a door-operated push switch works (30 minutes)

A refrigerator has a light bulb inside that lights up when you open the door.

1. Will the light turn off when you close the fridge door? Why?

   There is a switch that controls the light. This is switched off when the door closes.

2. Figure 5 shows a photo of a fridge with its door open. On this photo, find the switch that controls the light.
3. Homework: When you open a fridge at home, press this button in to see whether the light goes off.



Figure 5: Find the switch for the fridge's light.

Many push switches turn on a circuit when they are pressed in, and turn off the circuit when they are is not pressed in.

But the push switch for the fridge light works the other way round. It turns off the circuit when it is pressed in, and it turns on the circuit when it is not pressed in.

Figure 6 shows you how this type of switch works. The switch opens the circuit as long as the door is closed.

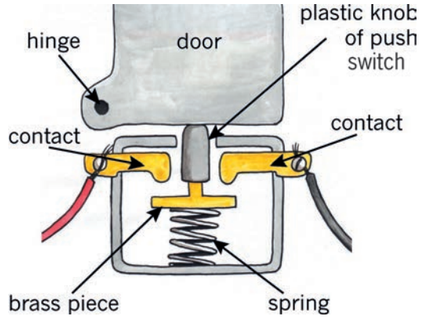

Figure 6: Top view of the parts inside a door-operated push switch: The grey parts are non-conducting and the yellow parts are conductors.

4. What happens when the door moves away from the plastic knob? How does the switch complete the circuit?

The spring pushes the brass piece up so that it touches both contacts. When this happens, the brass piece completes the circuit and the current can flow.

The switch is close, which means 'on', when nothing is pressing the plastic knob down.

Week 2

LB page 302

Logic gates and truth tables

Design brief and specifications

Switches with AND-type control (15 minutes)

The circuit in Figure 7 has AND-type control. Now let's see where people would use a circuit such as this one. Figure 8 shows an electric paper-cutting machine that is used to cut many sheets of paper simultaneously. An electric motor turns gears that press the blade of the machine down to cut the paper.

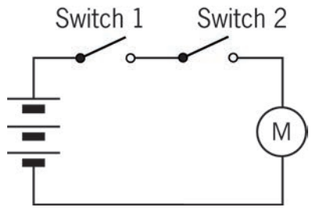

Figure 7: A circuit with AND-type control

A worker who uses the machine could easily cut his or her fingers, so the machine has a safety system in place.

To make the blade come down, the worker must use both hands to press two switches at the same time. If he or she presses only one switch, the blade will not move. So the machine will not work unless his or her hands are both out of the way.

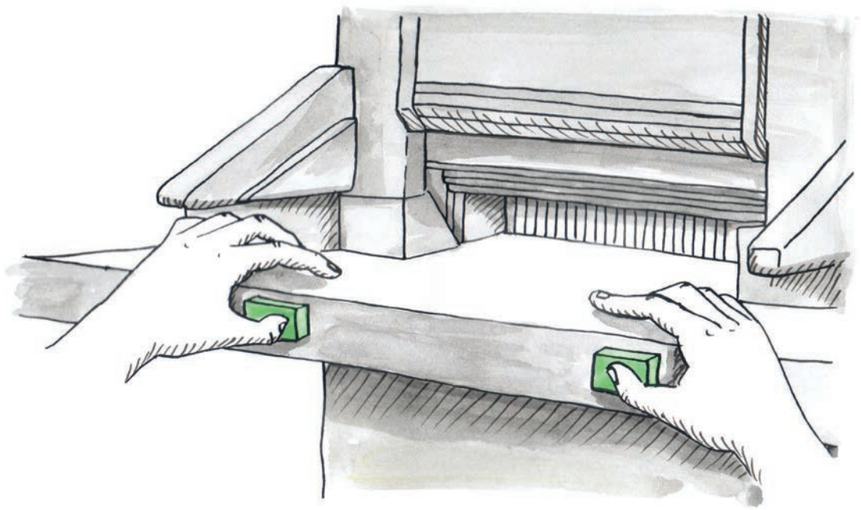

Figure 8: An electric paper-cutting machine

This machine's circuit has AND-type control. Switch 1 *and* Switch 2 must both be closed, by pressing them, before the motor will work.

Switches with OR-type control (15 minutes)

The circuit in Figure 9 has OR-type control. This type of control is used to switch on the light inside a car when you open one of the front doors. This is very useful when you get in or out of the car at night.

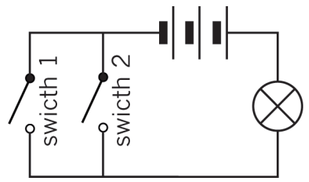

Figure 9: This circuit has OR-type control.

The light turns on when the driver opens the door, and turns off when that door is closed. If a passenger gets in at the other front door, the light goes on again, *even if the driver's door is closed*.

So the car has a circuit that switches on the light if *either* the driver's door is open *or* the passenger's door is open. This circuit has OR-type control.



Figure 10: The inside light goes on when you open one of the front doors.

A car's cabin light uses OR-type control because the bulb lights up if *either* the switch on the driver's door *or* the switch on the passenger's door is closed (on). It also lights up if they are both closed (on).

1. Look at the circuit in Figure 9. Both the switches are open (off). How can you get the bulb to light up? Think of three things you can do with the switches.

   Both switches can be closed.

   Switch 1 can be closed and switch 2 left open.

   Switch 2 can be closed and switch 1 left open.

The door-operated switch for the light inside the car is the same type of switch used for a fridge light, as shown in Figures 5 and 6.

Truth tables (30 minutes)

A computer gives many outputs depending on many inputs. To do this, it uses many AND-type and OR-type circuits inside a more complicated circuit. The AND and OR parts of the complicated circuits are called "logic gates".

Computer designers and programmers need methods to write down all the possible "states" that the system can be in. A state is one possible combination of values for all the inputs. "Truth tables" help them to write down all the possible states. Computers have millions of possible states. But to understand the method of truth tables, you only need to understand the truth tables of systems with a small number of states.

Look back at Figure 8, showing the electric paper-cutting machine. The operator has to press both switches to make the cutting blade move. So the circuit controlling the motor uses AND-type control.

Below is a truth table for this circuit. The inputs are the two switches. Each row of the table shows one possible combination of the inputs, and the output corresponding with it. So each row shows one possible state.

switch 1	switch 2	Does the blade move?
off	off	no
off	on	no
on	off	no
on	on	yes

A truth table is sometimes written using numbers instead of "on" or "off":

- For the inputs, which are the switches, a "1" means "on" and a "0" means "off".
- For the outputs, a "1" means "yes, it gives the output", and a "0" means "no output".

1. Copy and complete the truth table below for the paper-cutting machine's circuit.

switch 1	switch 2	output (Does the blade move?)
0	0	0
0	1	0
1	0	0
1	1	1

LB page 305

2. Now make a truth table for the light inside the car. If any one of the two front doors is open, the light is on. So this is a truth table for OR-control.

state	driver door switch	passenger door switch	output Does the light turn on?
only driver door open	1	0	1
only passenger door open	0	1	1
both driver and passenger doors open	1	1	1
no door open	0	0	0

A truth table shows all the possible states a circuit can be in, depending on the different combinations of the inputs.
It is a list of the inputs and the output or outputs for every possible state.

Combining AND-control with OR-control (15 minutes)

Many buses have push switches for passengers to let the driver know they want to get off at the next stop. The circuit diagram might look like Figure 11. In this circuit diagram, there are two push switches for passengers. Any one of these switches can ring the bell next to the driver.

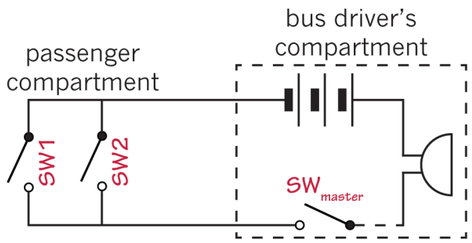

Figure 11: A circuit for passengers to tell the driver that they want to get off

1. Copy Figure 11 and write SW1 and SW2 next to the two switches for the passengers.

When school learners go on an excursion, they sometimes ring the bell many times just for fun. This prevents the driver from concentrating on the road, so he or she has a "master switch" to turn off the bell.

2. Which switch gives the bus driver control over the whole circuit? Write SW_{master} next to that switch on your drawing.

LB page 306

The passengers have OR-control because switch SW1 *or* switch SW2 can ring the bell.
However, the driver has AND-control. For the bell to ring, SW_{master} *and* one of SW1 or SW2 must be on.

3. Copy and complete the truth table below for the bell circuit of the bus.

SW_{master}	SW1	SW2	output from the bell
1	0	0	*0*
1	1	0	*1*
1	0	1	*1*
1	1	1	*1*
0	0	0	*0*
0	1	0	*0*
0	0	1	*0*
0	1	1	*0*

Write a design brief and specifications (15 minutes)

The scenario:
Mr Abdullahi has set up a shop. The customers are happy with his low prices. He sells food and clothing cheaply because he co-operates with other shopkeepers in the area. They work together to negotiate with the big suppliers of clothing and food to get cheaper prices.

Sometimes Mr Abdullahi is alone in the shop. If he has to work in the office at the back of the shop, he closes the two front doors of the shop, but the doors are not locked. He will only know if someone comes in at one of the doors if he sees them or if they call him.

Can you make him an alarm system that will tell him when a door opens? Sometimes Mr Abdullahi has an assistant in the shop, and then he does not need an alarm, so he wants a switch to turn the alarm system on and off.

1. Write the design brief. The design brief is a short statement that describes the need and what type of solution will meet that need. [1]

I am going to design and make a warning system that will ring a bell or sound a buzzer when either one of Mr Abdullahi's shop doors are opened. The alarm must be able to be switched on and off as needed.

2. Now write specifications for the solution. Specifications have detail about the system you are going to make. Remember that the system:
   - should make a sound when either one of the two doors are open, and
   - should have a switch to turn the whole system off. [3]

The alarm should make a sound when any one of the two doors, or both of them, are opened. The system needs OR-control, so that the alarm goes off when either of the switches is on.
The alarm should be able to switch off as well. Therefore, the alarm needs a master switch. For this, the main system needs AND-control.
The alarm should be loud enough to be heard at a distance.

[Total: 4]

LB page 307

Investigate: Components you could use (15 minutes)

1. What type of devices can you use for the alarm to make a loud sound? [1]

A beeper, a buzzer or something that rattles, such as a tin can.

2. What type of battery can you use? Remember that a 9 V battery will burn out motors that are rated for 1,5 V. Beepers also have their own voltage ratings, and you must find out what these are. [1]

The battery that is used should match the voltage rating of the device making the sound.

3. How can you make a switch that will close the circuit when the door is opened? Find a switch in this chapter or another chapter that will meet these requirements. [1]

The door-operated push switch for a fridge light will work for this alarm system.

[Total: 3]

Design: Draw a circuit diagram (15 minutes)

1. Should the alarm system use AND-control or OR-control? Explain. [2]

It uses OR-control: the alarm must sound if either door 1 or door 2 is opened. However, Mr Abdullahi must be able to control the whole system with a main switch, so there must be AND-control over the whole system as well.

2. Often designers look at circuits that have already been designed, to see whether any of those circuits will do the job. Look at Figures 7, 9 and 11 again. Which of these circuits will work? [1]

The circuit in Figure 11 will work for the alarm system..

3. Draw that circuit again. Give names for the different switches and show them as labels on your circuit diagram. [1]

The bus circuit must be redrawn.

It should show a master switch.

It should show two door switches in parallel. (In the bus circuit, these two switches were not door switches.)

4. Show more information on your circuit diagram: Draw dashed lines around the part of the circuit that is in the front of the shop, and other dashed lines around the part that is in the office.
   Hint: Look at Figure 11 again to see how dashed lines were used to show the part of the circuit in the bus driver's compartment. [2]

[Total: 6]

Week 3

LB page 308

Design, make and communicate

Draw the layout of your alarm system in the shop (15 minutes)

Figure 12 shows a simple sketch of the shop. Make a 2D copy of the drawing, simply showing the top view.

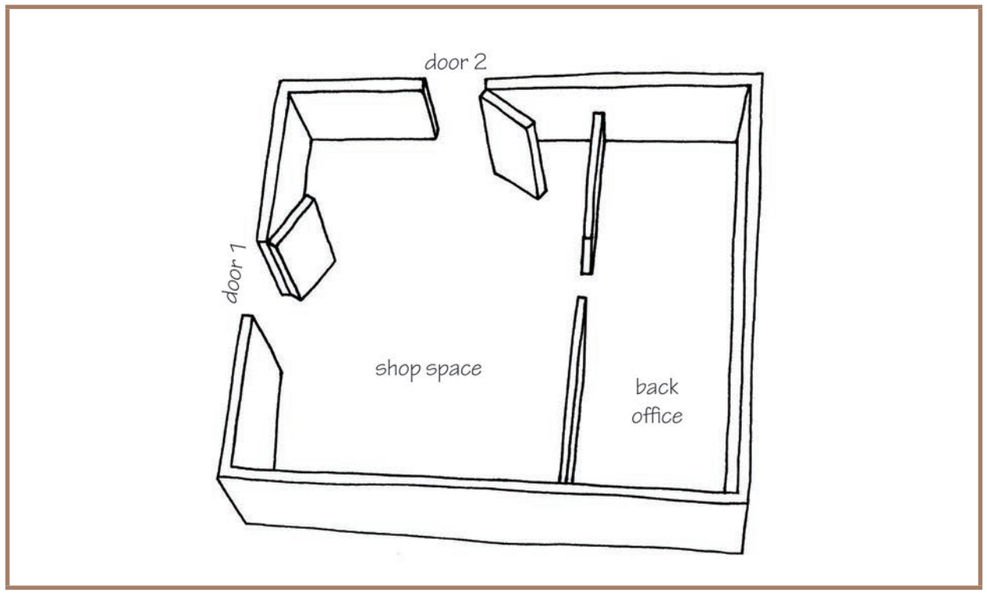

Figure 12: Design the placement and wiring of the alarm system.

Draw on your copy of Figure 12 to show where you will put all the switches and other circuit components. Also show the connecting wires for the circuit. Put in labels for the circuit components. The circuit components should be connected as shown by the circuit diagram that you drew last week. [6]

Make a cardboard model of the shop (15 minutes)

Make a model of the shop out of a cardboard box. Cut two doors in the box. The model should not have a roof, so that you can see inside it. Make the model as simple as possible, otherwise you will not have enough time to finish building the alarm system. [10]

LB page 309

Design an alarm switch (15 minutes)

Figures 13 to 15 show examples of switches.

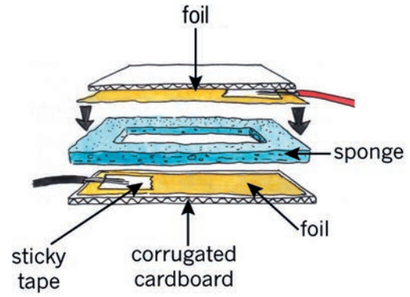

Figure 13: A pressure switch under a carpet

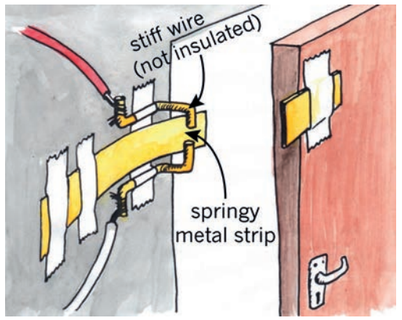

Figure 14: A moving contact switch

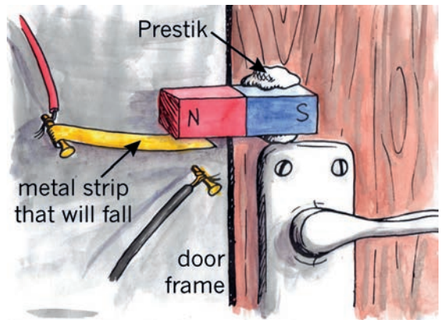

Figure 15: A magnetic switch

Use an idea or ideas from these examples to design your own door-operated switch that is on when the door is open and off when the door is closed. Make a sketch of your design. Add labels to explain the different parts of your switch design. [8]

Learners' designs of switches can be similar to one or more of the examples given above, but they should not be identical to one of these designs.

Learners who used more of their own ideas should be given more marks.

LB page 310

Make the switches for your alarm system (30 minutes)

Make two of the door-operated switches that you designed. Remember that they need to fit on the doors of your cardboard model of the shop. [12]

Do not make a master switch, as you don't have enough time for that. You can simply connect two crocodile clips of conducting wires to "switch on" the master switch, and disconnect them to open the circuit and "switch off" the master switch.

Add your circuit to your model of the shop (30 minutes)

Now add all your circuit components and conducting wires to your cardboard model of the shop. Your drawing of the placement and wiring of the alarm system will help you to connect all the circuit components in the correct way.

Stick the wires to the walls of the box with tape to make your model neat.

Connect all the circuit components. [12]

In a real building, the alarm wires are stuck to the walls or are in the ceiling. The door switches are on the *inside* of the doors. If they were on the *outside*, a burglar could disconnect them.

Evaluate: Test your alarm system (15 minutes)

When you evaluate the project, ask yourself: "Did I solve Mr Abdullahi's problem?" The following questions will help you to test whether your alarm fulfils all of the specifications. Do these tests:

1. Does the alarm make a noise when you open only door 1?
2. Does the alarm make a noise when you open only door 2?
3. Does the alarm make a noise when you open both doors?
4. Can Mr Abdullahi switch the system off and leave the doors open?

LB page 311

5. Copy and complete the truth table for the system. [2]

master switch	switch 1	switch 2	output
1	*0*	*0*	*0*
1	*0*	1	1
1	1	*0*	1
1	1	1	1
0	0	0	*0*
0	0	1	*0*
0	1	0	*0*
0	1	1	*0*

Homework: Make an advertisement for your alarm system

Mr Abdullahi likes your system so much that he offers to advertise it to other shopkeepers. He thinks some of them will pay you to build and install alarms for them.

He asks you to make a poster that shows the shop and the doors, some of the parts of the alarm system, and a few sentences that explain how the system works.

Before you make the poster to advertise your alarm system, first sketch some rough ideas for your poster. [7]